Midea

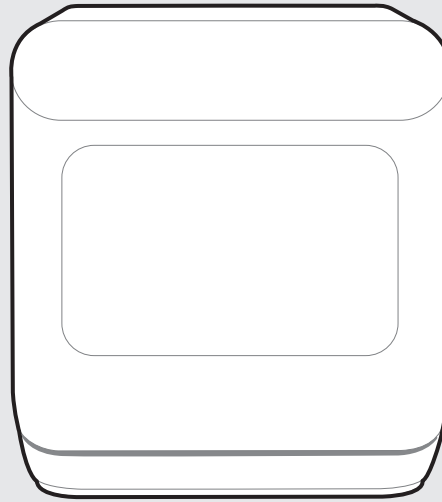

Dish Washer

USER MANUAL

MDWMINIPLUS

Warning notices: Before using this product, please read this manual carefully and keep it for future reference.
The design and specifications are subject to change without prior notice for product improvement.
Consult with your dealer or manufacturer for details.
The diagram above is just for reference. Please take the appearance of the actual product as the standard.

THANK YOU LETTER

Thank you for choosing Midea! Before using your new Midea product, please read this manual thoroughly to ensure that you know how to operate the features and functions that your new appliance offers in a safe way.

CONTENTS

THANK YOU LETTER 01
SAFETY INSTRUCTIONS 02
SPECIFICATIONS 08
PRODUCT OVERVIEW 10
QUICK START GUIDE 11
PRODUCT INSTALLATION 13
OPERATION INSTRUCTIONS 16
CLEANING AND MAINTENANCE 24
TROUBLESHOOTING 27
TRADEMARKS, COPYRIGHTS AND LEGAL STATEMENT 31
DISPOSAL AND RECYCLING 32
DATA PROTECTION NOTICE 33

SAFETY INSTRUCTIONS

Intended Use

- The following safety guidelines are intended to prevent unforeseen risks or damage from unsafe or incorrect operation of the appliance. Please check the packaging and appliance on arrival to make sure everything is intact to ensure safe operation. If you find any damage, please contact the retailer or dealer.
- Please note modifications or alterations to the appliance are not allowed for your safety concern. Unintended use may cause hazards and loss of warranty claims.

Explanation of Symbols

	Danger This symbol indicates that there are dangers to the life and health of persons due to extremely flammable gas.
	Warning of electrical voltage This symbol indicates that there is a danger to life and health of persons due to voltage.
	Warning The signal word indicates a hazard with a medium level of risk which, if not avoided, may result in death or serious injury.

⚠	**Caution** The signal word indicates a hazard with a low degree of risk which, if not avoided, may result in minor or moderate injury.
💡	**Attention** The signal word indicates important information (e.g. damage to property), but not danger.
🔧	**Observe instructions** This symbol indicates that a service technician should only operate and maintain this appliance in accordance with the operating instructions.

Read these operating instructions carefully and attentively before using/commissioning the unit and keep them in the immediate vicinity of the installation site or unit for later use!

⚠ DANGER: Risk of Fire/Flammable materials

- **When using your dishwasher, follow the precautions listed below:**
- Installation and repair can only be carried out by a qualified technician.
- This appliance is intended to be used in household and similar applications such as:
  -staff kitchen areas in shops, offices and other working environments;
  -farm houses;
  -by clients in hotels, motels and other residential type environments;
  -bed and breakfast type environments.
- This appliance can be used by children aged from 8 years and above and persons with reduced physical, sensory or mental capabilities or lack of experience and knowledge if they have been given supervision or instruction concerning use of the appliance in a safe way and understand the hazards involved.
- Children shall not play with the appliance. Cleaning and user maintenance shall not be done by children without supervision. (For EN60335-1)
- This appliance is not intended for use by persons (including children) with reduced physical, sensory or mental capabilities, or lack of experience and knowledge, unless they have been given supervision or instruction concerning use of the appliance by a person responsible for their safety. (For IEC60335-1)
- Packaging material could be dangerous for children!
- Children should be supervised to ensure that they do not play with the appliance.
  This appliance is for indoor household use only.

To protect against the risk of electrical shock, do not immerse the unit, cord or plug in water or other liquid.

- Please unplug before cleaning and maintenance the appliance. Use a soft cloth moisten with mild soap, and then use a dry cloth to wipe it again.
- If the supply cord is damaged, it must be replaced by the manufacturer or its service agent or a similarly qualified person in order to avoid a hazard.
- If you use the dishwasher in your RV, please use it after the RV stops stably.

⚠ Earthing Instructions

- This appliance must be earthed. In the event of a malfunction or breakdown, earthing will reduce the risk of an electric shock by providing a path of least resistance of electric current. This appliance is equipped with an earthing conductor plug.
- The plug must be plugged into an appropriate outlet that is installed and earthed in accordance with all local codes and ordinances.
- Improper connection of the equipment-earthing conductor can result in the risk of an electric shock.
- Check with a qualified electrician or service representative if you are in doubt whether the appliance is properly grounded.
- Do not modify the plug provided with the appliance if it does not fit the outlet.
- Have a proper outlet installed by a qualified electrician.
- Do not abuse, sit on, or stand on the door or dish rack of the dishwasher.
- Do not operate your dishwasher unless all enclosure panels are properly in place.

- Open the door very carefully if the dishwasher is operating, there is a risk of water squirting out.
- Do not place any heavy objects on or stand on the door when it is open. The appliance could tip forward.
- When loading items to be washed:
  1) Locate sharp items so that they are not likely to damage the door seal;
  2) Warning: Knives and other utensils with sharp points must be loaded in the basket with their points facing down or placed in a horizontal position.
- Some dishwasher detergents are strongly alkaline. They can be extremely dangerous if swallowed. Avoid contact with the skin and eyes and keep children away from the dishwasher when the door is open.
- Check that there are no detergent residues after completion of the wash cycle.
- Do not wash plastic items unless they are marked “dishwasher safe” or the equivalent.
- For unmarked plastic items not so marked, check the manufacturer's recommendations.
- Use only detergent and rinse agents recommended for use in an automatic dishwasher.
- Never use soap, laundry detergent, or hand washing detergent in your dishwasher.
- The door should not be left open, since this could increase the risk of tripping.
- During installation, the power supply must not be excessively or dangerously bent or flattened.
- Do not tamper with controls.

- The appliance needs to be connected to the main water valve using new hose sets. Old sets should not be reused.
- To save energy, in stand by mode, the appliance will switch of automatically after 15 minutes without any user interaction.
- The maximum number of place settings to be washed is 3.
- The maximum permissible inlet water pressure is 1MPa.
- The minimum permissible inlet water pressure is 0.04MPa.

Disposal

- For disposing of package and the appliance please go to a recycling center.
  Therefore cut off the power supply cable and make the door closing device unusable.
- Cardboard packaging is manufactured from recycled paper and should be disposed in the waste paper collection for recycling.
- By ensuring this product is disposed of correctly, you will help prevent potential negative consequences for the environment and human health, which could otherwise be caused by inappropriate waste handling of this product.
- For more detailed information about recycling of this product, please contact your local city office and your household waste disposal service.
- **DISPOSAL: Do not dispose this product as unsorted municipal waste. Collection of such waste separately for special treatment is necessary.**

SPECIFICATIONS

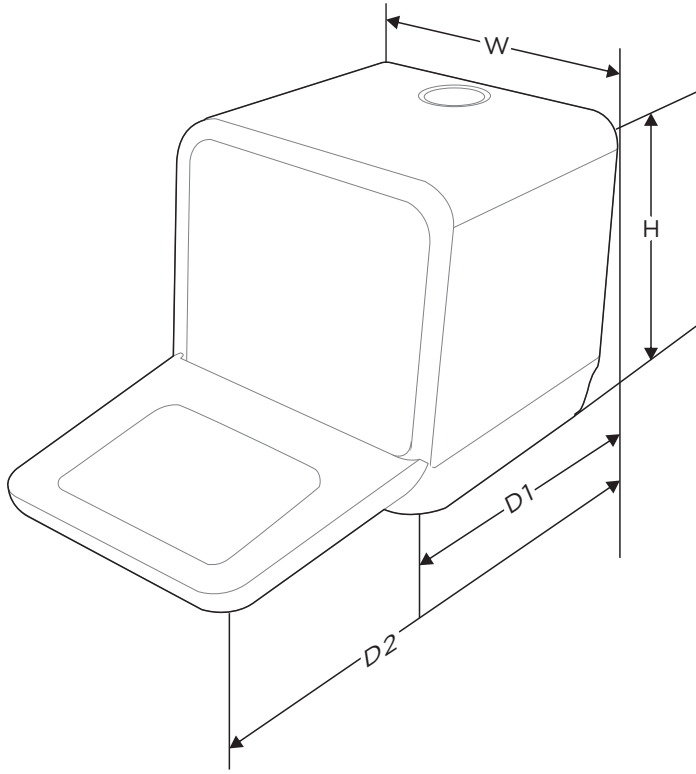

Height (H)	465 mm
Width (W)	420 mm
Depth (D1)	435 mm (with the door closed)
Depth (D2)	780 mm (with the door opened 90°)

Product information sheet

Manufacturer	MIDEA
Type/Description	MDWMINIPLUS
Standard place settings	3
Energy efficiency class	★☆☆☆☆☆ 1
Water consumption class	★★★☆☆☆ 3
Standard cleaning cycle	ECO
Energy consumption of the standard cleaning cycle	0.368 kWh
Water consumption of the standard cleaning cycle	4.9 liter
Program duration of the standard cleaning cycle	200 min
Noise level	58 dB(A) re 1 pW
Mounting	Table Top
Could be built-in	NO
Power consumption	730-860W
Rated voltage/frequency	AC 220-240V/50Hz
Water pressure (flow pressure)	0.04-1.0MPa=0.4-10 bar

PRODUCT OVERVIEW

Product

IMPORTRANT

To get the best performance from your dishwasher, read all operating instructions before using it for the first time.

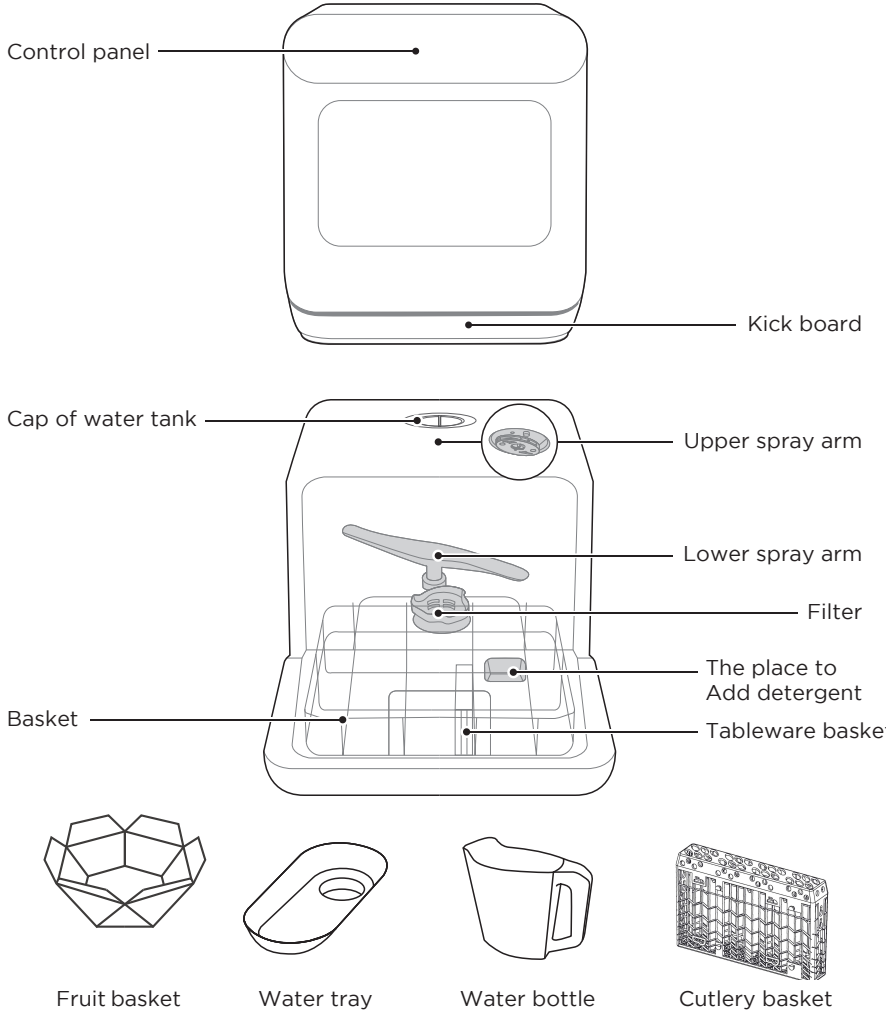

NOTE

Pictures are only for reference, different models may be different.

QUICK START GUIDE

Please read the corresponding content in the instruction manual for detailed operating method.

1. Connected to power supplies

The power supply is 220-240 VAC 50 Hz
the specification of the socket is 10 A 250 VAC
The connection of the drain pipe: Put end of the drain into a sink or bucket.

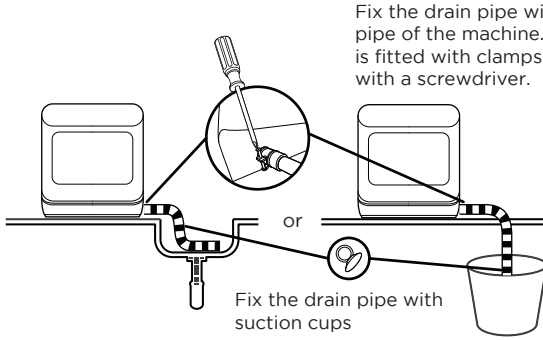

2. Add water into the dishwasher's tank

Note: Before adding water, you need to press power button to turn on the diswasher.
There are two ways to add water into the tank:

❶ Connect inlet hose to the tap;
❷ Open the cap and add water into the dishwasher's tank manually

There are two ways of prompting the tank that full of water:
A. Before starting:
When the tank is full of water, the machine will beep fleetly for 3 seconds.
B. After starting :
Water is not enough, light is on;
Water is enough, light will be off and the machine will beep fleetly for 3 seconds.
Remove the larger residue

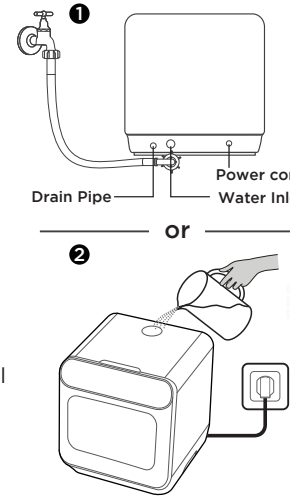

3. Remove the larger residue

Please remove the large residue before placing.

4. Open the door, placing the dishes and adding detergent

Placing order by size and from the two sides to the middle.All cutlery are suggested to be tilted to improve cleaning preformance.
The arm will be blocked with the improper placement of the cutlery and cleaning effect may not be ideal.

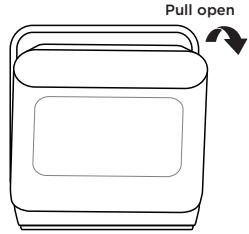

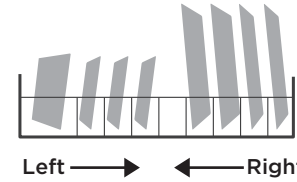

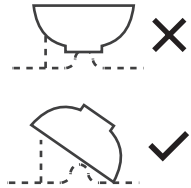

Should not place the cutlery in the right direction or may affect the cleaning preformance. Try to leave the dirty face towards the spray arm.

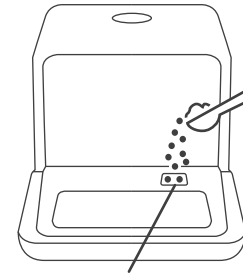

The palce to add the detergent (The program of friut should not add the detergent)

5. Close the door, select the program and start the dishwasher

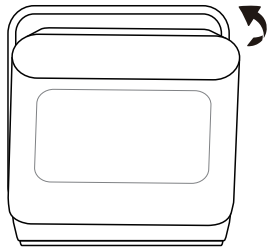

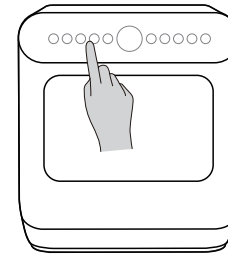

PRODUCT INSTALLATION

⚠ WARNING

Electrical Shock Hazard
Disconnect electrical power before installing dishwasher.
Failure to do so could result in death or electrical shock.

⚠ Attention

The installation of the pipes and electrical equipments should be done by professionals.

About Power Connection

⚠ WARNING

For personal safety:
Do not use an extension cord or an adapter plug with this appliance.
Do not, under any circumstances, cut or remove the earthing connection from the power cord.

Electrical requirements

Please look at the rating label to know the rating voltage and connect the dishwasher to the appropriate power supply. Use the required fuse 10 amp, time delay fuse or circuit breaker recommended and provide separate circuit serving only this appliance.

Electrical connection

Ensure the voltage and frequency of the power being corresponds to those on the rating plate. Only insert the plug into an electrical socket which is earthed properly.
If the electrical socket to which the appliance must be connected is not appropriate for the plug, replace the socket, rather than using a adaptors or the like as they could cause overheating and burns.

⚠ Ensure that proper earthing exists before use

Installation preparation

The installation position of dishwasher should be near the existing water inlet tap and drain outlet and power socket.
One side of the cabinet sink should be chosen to facilitate the connection of drain hoses of the dishwasher.

Positioning The Appliance

Position the appliance in the desired location. The back should rest against the wall behind it, and the sides, along the adjacent cabinets or walls. The dishwasher is equipped with water supply and drain hoses that can be positioned either to the right or the left sides to facilitate proper installation.

Water Connection

Cold water connection

Connect the cold water supply hose to a threaded 3/4(inch) connector and make sure that it is fastened tightly in place.
If the water pipes are new or have not been used for an extended period of time, let the water run to make sure that the water is clear. This precaution is needed to avoid the risk of the water inlet to be blocked and damage the appliance.
Please Note: If the supplied hose cloes not fit your tap, please contact your local plumbing supply center where adapters are available for purchase.

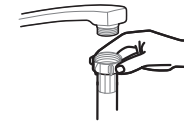

Connection Of Drain Hoses

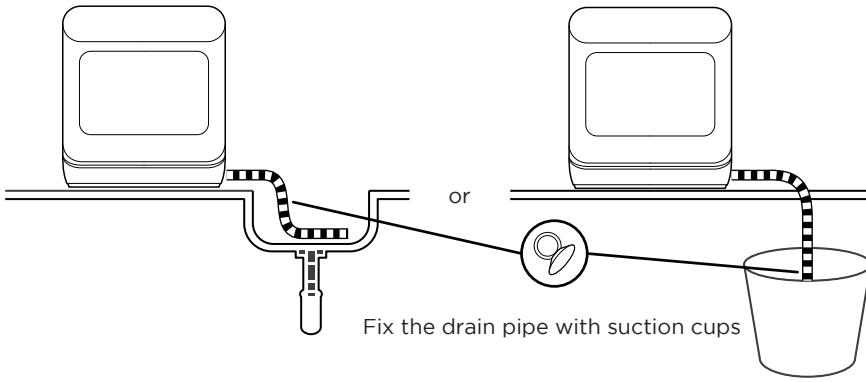

The connection of the drain pipe: Put end of the drain into a sink or bucket.

How to drain excess water from hoses

If the sink is more than 1m higher than the bottom of the dishwasher, the excess water may remain in the drain hose. It is necessary to place a suitable water container outside and lower than the dishwasher. The water container should be at least 6 liters.

Water outlet

Connect the water drain hose. The drain hose must be correctly fitted to avoid water leaks. Ensure that the water drain hose is not kinked or squashed.

Extension hose

If you need a drain hose extension, make sure to use a similar drain hose.
It must not be longer than 4 meters, otherwise the cleaning effect of the dishwasher could be reduced.

OPERATION INSTRUCTIONS

Control Panel

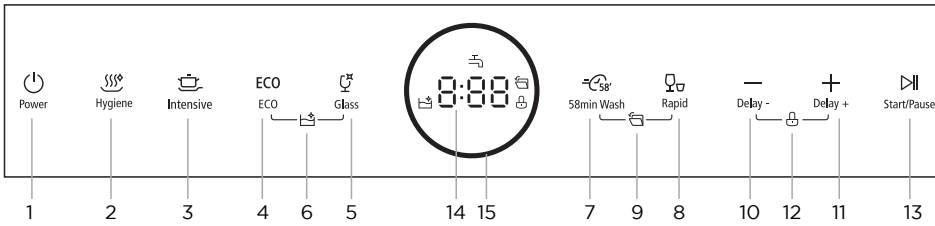

		Description
No.1	Power	• Press this button to power on or power off your dishwasher.
No.2	Hygiene	• Use to sanitize your dishes and glassware. The highest water temperature is 70°C.
No.3	Intensive	• For the heaviest soiled crockery, and normally soiled pots, pans, dishes etc. With dried-on food.
No.4	ECO	• This is standard program, it is suitable to clean normally soiled tableware and it is the most efficient program in terms of its combined energy and water consumption for that type of tableware.
No.5	Glass	• For lightly soiled crockery and glass.
No.6	Self Clean	• Press and hold the ECO button+ Glass button for 3 seconds simultaneously to provides an effective cleaning of the dishwasher itself.
No.7	58min Wash	• For normally soiled loads that need 58 min wash.
No.8	Rapid	• A shorter wash for lightly soiled loads that do not need drying.
No.9	Auto open	• After washing, the door will open automatically to achieve better drying effect. • Press and hold the 58min Wash and Rapid buttons for 3seconds to open or cancel this function. • The dishwasher door must not be blocked when set to open automatically. This can disrupt door lock functionality.

		Description
No.10	Delay -	• Press this button to reduce the delayed hours for washing. One press on this button reduce the delay of the start of washing by one hour.
No.11	Delay +	• Press this button to set the delayed hours for washing. You can delay the start of washing up to 24 hours. One press on this button delays the start of washing by one hour.
No.12	Child lock	• This function allows you to lock the buttons on the control panel, so children cannot accidently start the dishwasher by pressing the buttons on the panel. Only the Power button remains active. To lock or unlock the buttons on the control panel, press and hold the Delay - and Delay + buttons for 3 seconds simultaneously.
No.13	Start/Pause	• After completing program and function selection or delay time setting, press this button to start or pause. When the washing program is running, after the program is suspended by opening the door, press this button for 3 seconds to cancel the current program and function.
No.14 Screen	Water Faucet	• If the " " indicator is lit, it means the water faucet closed.
	8:88	• To show the reminding time, delay time, error code etc.
No.15	Light ring	• The color of the ring will turn red if the water temperature is over 59 °C.

Programs

The table below shows which programs are best for the levels of food residue on them and how much detergent is needed. It also show various information about the programs. Consumption values and program duration are only indicative except for the ECO program.

Program	Description Of Cycle	Detergent Pre/Main Wash	Running Time(min)	Energy (kWh)	Water (L)
Hygiene	Wash (65°C) Rinse Rinse (70°C) Drying	4g	170	0.548	5.0
Intensive	Wash (62°C) Rinse Rinse (68°C) Drying	6g	177	0.527	5.0
ECO (*AS/NZS 2007.1)	Wash (47°C) Rinse Rinse (61°C) Drying	4g	200	0.368	4.9
Glass	Wash (50°C) Rinse Rinse (65°C) Drying	4g	90	0.421	4.9
Self Clean	Wash (50°C) Rinse Rinse (65°C) Drying	6g	77	0.548	4.0
58min Wash	Wash (50°C) Rinse Rinse (65°C) Drying	4g	58	0.415	4.1
Rapid	Wash (40°C) Rinse Rinse (40°C)	3g	29	0.041	4.4

NOTE

ECO : This program is the test cycle. The information for comparability test in accordance with *AS/NZS 2007.1.

*AS/NZS 2007.1

Preparing And Loading Dishes

Consider buying utensils which are identified as dishwasher-proof.
For particular items, select a program with the lowest possible temperature.
To prevent damage, do not take glass and cutlery out of the dishwasher immediately after the program has ended.

For washing the following cutlery/dishes
Are not suitable
Cutlery with wooden, horn china or mother-of-pearl handles
Plastic items that are not heat resistant
Older cutlery with glued parts that are not temperature resistant
Bonded cutlery items or dishes
Pewter or cooper items
Crystal glass
Steel items subject to rusting
Wooden platters
Items made from synthetic fibres

Are of limited suitability
Some types of glasses can become dull after a large number of washes
Silver and aluminum parts have a tendency to discolor during washing
Glazed patterns may fade if machine washed frequently

Attention before or after loading the dishwasher basket
(For the best performance of the dishwasher, follow these loading guidelines.
Features and appearance of baskets and cutlery baskets may vary from your model.)
Scrape off any large food paritcles. Soften remnants of burnt food in pans. It is not necessary to rinse the dishes under running water. Place objects in the dishwasher in following way:
Items such as cups, glasses, pots/pans, etc. are face downwards.
Curved items, or those with recesses, should be loaded at aslant so that water can run off.
All utensils are stacked securely and can not tip over.
All utensils are placed in the way that the spray arms can rotated freely during washing.

NOTE

Very small items should not be washed in the dishwasher as they could easily fall out of the basket.

Load hollow items such as cups, glasses, pans etc. with the opening facing downwards so that water cannot collect in the container or a deep base.
Dishes and items of cutlery must not lie inside one another, or cover each other.
To avoid damage to glasses, they must not be touched.
Long bladed knives stored in an upright position are a potential hazard!
Long and/or sharp items of cutlery such as carving knives must be positioned horizontally in the basket.
Please do not overload your dishwasher. This is important for good results and for reasonable energy consumption.

Loading The Basket

Position the dishes and cookware so that they will not get moved by the spray of water.

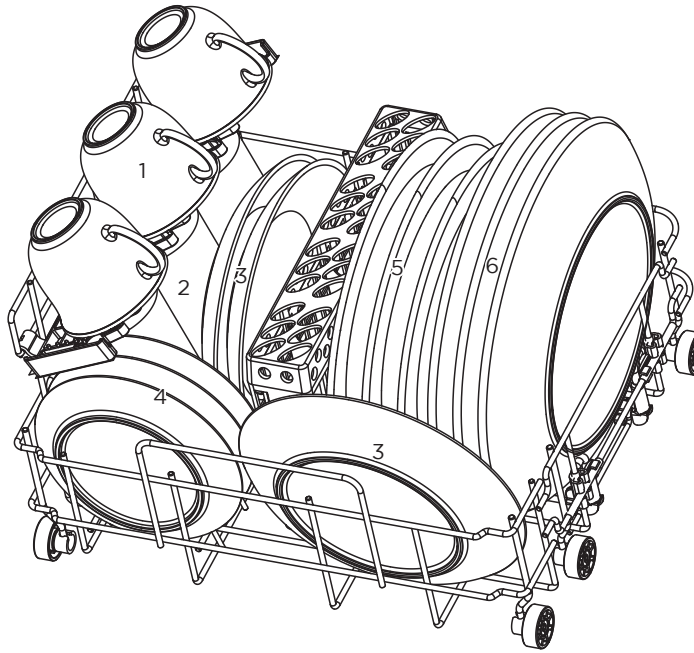

Number	Item
1	Cup
2	Glass
3	Dessert Dish
4	Saucer
5	Soup Plate
6	Dinner Plate

Function Of The Rinse Aid And Detergent

The rinse aid is released during the final rinse to prevent water from forming droplets on your dishes, which can leave spots and streaks. It also improves drying by allowing water to roll off the dishes. Your dishwasher is designed to use liquid rinse aids.

⚠ WARNING

Only use branded rinse aid for dishwasher. Never fill the rinse aid dispenser with any other substances (e.g. Dishwasher cleaning agent, liquid detergent). This would damage the appliance.

Function of detergent

The chemical ingredients that compose the detergent are necessary to remove, crush and dispense all dirt out of the dishwasher. Most of the commercial quality detergents are suitable for this purpose.

⚠ WARNING

Proper Use of Detergent

Use only detergent specifically made for dishwashers use. Keep your detergent fresh and dry.

Do not fill detergent into the dispenser until you are ready to start the dishwasher.

Dishwasher detergent is corrosive! Keep dishwasher detergent out of the reach of children.

Adding detergent

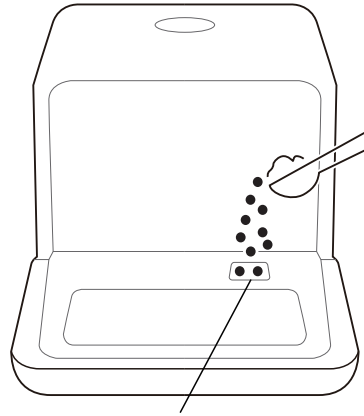

The palce to add the detergent
(The program of friut should not add the detergent)

Saving Energy

1. Pre-rinsing of tableware items leads to increased water and energy consumption and is not recommended.
2. Washing tableware in a household dishwasher usually consumes less energy and water in the use phase than hand dishwashing when the household dishwasher is used according to the instructions.

Starting A Program

Starting a wash cycle...
Draw out the basket(see the section entitled "Loading the basket").
Pour in the detergent (see the section“Adding detergent”).
Insert the plug into the socket. The power supply is 220-240VAC 50 Hz, the specification of the socket is 10 A 250 VAC.
Press the power button to turn on the appliance,
Connect the inlet hose to the tap, make sure that the water supply is turned on to full pressure, or add water the the tank manually.
Select a suitable program according to the “Wash cycle table”;
If a program is selected, the response light will light. Then press the Start/Pause button, the dishwasher begins to start.

NOTE

When you press the Start/Pause button to pause during washing, the dishwasher will mooing every minute unless you press the Start/Pause button to start.

Changing The Program Mid-cycle

Premise: You can modify the washing program, If the dishwasher just worked for a short time. Otherwise, the detergent may have already been released, and the appliance may have already drained the wash water in this case, the cycle must be restarted.

Press Start/Pause button to pause the machine when the door is closed.
Press any program button more than 3 seconds the machine will be in stand by state, then you can change the program to the desired cycle setting
(see the section entitled " Starting a program").

The Display window shows the state of the dishwasher:
a) Display window shows "-:--" ----------> stand by;
b) Display window shows "H:MM" and not blinking ----------> pause;
c) Display window shows "H:MM" and blinking ----------> run;
d) Display window shows "END" ----------> end.

NOTE

If you open the door during washing, the machine will pause. When you close the door and press the Start/Pause button, the machine will keep on working after 10 seconds.

If your model has broken remember function, the machine will go on to finish the selected program after the power cut.

Forget To Add A Dish?

A forgotten dish can be added at the early phase of the washing cycle. If this is the case, follow the instructions below:

1. Press the Start/Pause button to pause the washing.
2. After the spray arms stopped working, you can open the door completely.
3. Add the forgotten dishes.
4. Close the door.
5. Press the Start/Pause button, the dishwasher will continued to run after 10 seconds.

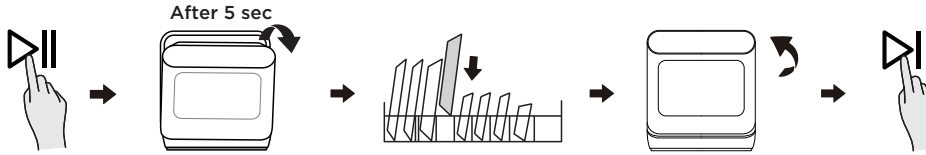

⚠ WARNING

It is dangerous to open the door mid-cycle, as hot steam may scald you.

At the end of the Wash Cycle

When the working cycle has finished, the buzzer of dishwasher will sound 8 seconds, then stop. Turn off the appliance using the ON/OFF button, shut off the water supply and open the door of the dishwasher. Wait a few minutes before unloading the dishwasher to avoid scald, the dishes and utensils are still hot and more susceptible to breakage. They will also dry better.

Switch Off the Dishwasher

1. Switch off the dishwasher by pressing the ON/OFF button.
2. Turn off the water tap!

Open the door carefully

Hot dishes are sensitive to knocks. The dishes should be allowed to cool down around 15 minutes before removing from the appliance.
Open the dishwasher's door, leave it open and wait a few minutes before removing the dishes. In this way they will be cooler and the drying will be improved.

Unloading the dishwasher

It is normal that the dishwasher is wet inside.

⚠ WARNING

It is dangerous to open the door when washing, because the hot water may scald you.

Forced drainage operation

In standby mode, you can press and hold “Hygiene 72°” button + “Rapid” button for 3 seconds simultaneously to drain the water tank.

CLEANING AND MAINTENANCE

External Care

The door and the door seal

Clean the door seals regularly with a soft damp cloth to remove food deposits.When the dishwasher is being loaded, food and drink residues may drip onto the sides of the dishwasher door. These surfaces are outside the wash cabinet and are not accessed by water from the spray arms. Any deposits should be wiped off before the door is closed.

The control panel

If cleaning is required, the control panel should be wiped with a soft damp cloth only.

⚠ WARNING

To avoid penetration of water into the door lock and electrical components, do not use a spray cleaner of any kind.
Never use abrasive cleaners or scouring pads on the outer surfaces because they may scratch the finish. Some paper towels may also scratch or leave marks on the surface.

Internal Care

Filtering system

The filtering system in the base of the wash cabinet retains coarse debris from the washing cycle, including foreign objects such as tooth picks or shards. The collected coarse debris may cause the filters to clog. Check the condition of the filters regularly, carefully remove foreign objects and clean the parts of the filtering system if necessary with water. Follow the steps below to clean the filter.

⚠ WARNING

Pictures are only for reference, different models of the filtering system and spray arms may be different.

1. Hold the coarse filter and rotate it anticlockwise to unlock the filter. Lift the filter upwards and out of the dishwasher.

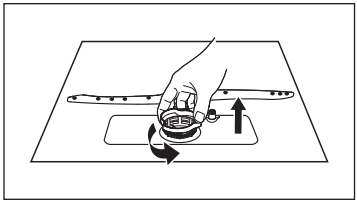

2. Lift fine filter up from main filter.

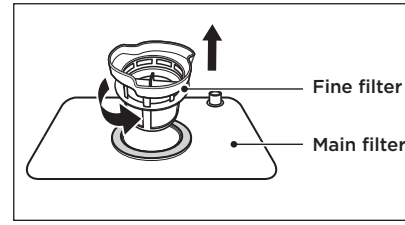

3. Larger food remnants can be cleaned by rinsing the filter under running water. For a more thorough clean, use a soft cleaning brush.

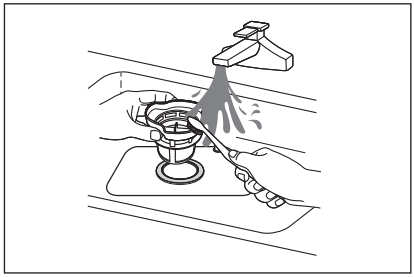

4. Reassemble the filters in the reverse order of the disassembly, replace the filter insert, and rotate clockwise to the close arrow.

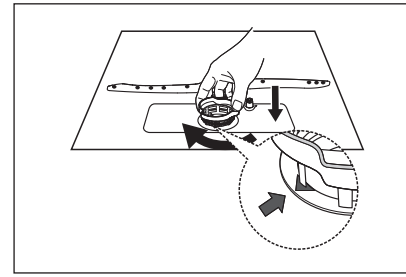

⚠ WARNING

Do not over tighten the filters. Put the filters back in sequence securely, otherwise coarse debris could get into the system and cause a blockage.
Never use the dishwasher without filters in place. Improper replacement of the filter may reduce the performance level of the appliance and damage dishes and utensils.

Spray arms

It is necessary to clean the spray arm regularly for hard water chemicals will clog the spray arm jets and bearings.
To clean the spray arm, follow the instructions below:

1. To remove the spray arm, pull out the spray arm upward.

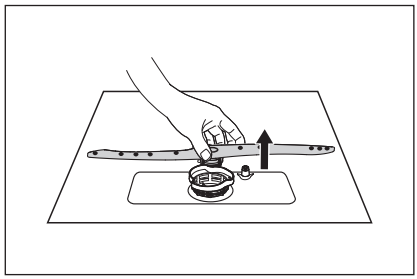

2. Wash the spray arm in soapy and warm water and use a soft brush to clean the jets. Replace them after rinsing them thoroughly.

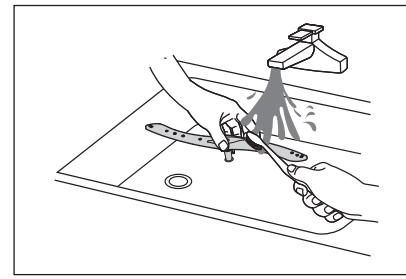

Caring For The Dishwasher

Frost precaution

Please take frost protection measures on the dishwasher in winter. Every time after washing cycles, please operate as follows:

1. Cut off the electrical power to the dishwasher at the supply source.
2. Turn off the water supply and disconnect the water inlet pipe from the water valve.
3. Drain the water from the inlet pipe and water valve. (Use a pan to gather the water)
4. Reconnect the water inlet pipe to the water valve.
5. Remove the filter at the bottom of the tub and use a sponge to soak up water in the sump.

After every wash

After every wash, turn off the water supply to the appliance and leave the door slightly open for a while so that moisture and odors are not trapped inside.

Remove the plug

Before cleaning or performing maintenance, always remove the plug from the socket.

No solvents or abrasive cleaning

To clean the exterior and rubber parts of the dishwasher, do not use solvents or abrasive cleaning products. Only use a cloth with warm soapy water.
To remove spots or stains from the surface of the interior, use a cloth dampened with water an a little vinegar, or a cleaning product made specifically for dishwashers.

When not in use for a long time

It is recommend that you run a wash cycle with the dishwasher empty and then remove the plug from the socket, turn off the water supply and leave the door of the appliance slightly open. This will help the door seals to last longer and prevent odors from forming within the appliance.

Moving the appliance

If the appliance must be moved, try to keep it in the vertical position. If absolutely necessary, it can be positioned on its back.

Seals

One of the factors that cause odours to form in the dishwasher is food that remains trapped in the seals. Periodic cleaning with a damp sponge will prevent this from occurring.

TROUBLESHOOTING

Before Calling For Service
Reviewing the charts on the following pages may save you from calling for service.

Problem	Possible reason	Solution
Dishwasher doesn't start	• Fuse blown, or the circuit break tripped.	Replace fuse or reset circuit breaker. Remove any other appliances sharing the same circuit with the dishwasher.
	• Power supply is not turned on.	Make sure the dishwasher is turned on and the door is closed securely. Make sure the power cord is properly plugged into the wall socket.
	• Water pressure is low	Check that the water supply is connected properly and the water is turned on.
	• Door of dishwasher not properly closed.	Make sure to close the door properly and latch it.
Water not pumped form dishwasher	• Twisted or trapped drain hose.	Check the drain hose.
	• Filter clogged.	Check the coarse filter.
	• Kitchen sink clogged.	Check the kitchen sink to make sure it is draining well. If the problem is the kitchen sink that is not draining , you may need a plumber rather than a serviceman for dishwashers.
Foam in the tub	• Wrong detergent.	Use only the dedicated dishwasher detergent to avoid suds. If suds exist in the washer. Open the door for 20-30 minutes to allow the foam to evaporate. If the foam still exists in the liner. Add 1.5L of water to the liner, close the dishwasher door and run a forced drain to drain it with the water. Repeat above operation until the foam is cleared.
Stained tub interior	• Detergent with colourant may have been used.	Make sure that the detergent has no colourant.
White film on inside surface	• Hard water minerals	To clean the interior, use the damp soft cloth with dishwasher detergent and wear rubber gloves. Never use any other cleaner than dishwasher detergent for the risk of foaming or suds.

Problem	Possible reason	Solution
There are rust stains on cutlery	• The affected items are not corrosion resistant.	Avoid washing items that are not corrosion resistant in the dishwasher.
	• A program was not run after dishwasher salt was added. Traces of salt have gotten into the wash cycle.	Always run a wash program without any crockery after adding salt.
	• The lid of the softer is loose.	Check the softener lid is secure.
Knocking noise in the dishwasher	• A spray arm is knocking against an item in a basket	Interrupt the program and rearrange the items which are obstructing the spray arm.
Rattling noise in the dishwasher	• Items of crockery are loose in the dishwasher.	Interrupt the program and rearrange the items of crockery.
Knocking noise in the water pipes	• This may be caused by on-site installation or the cross-section of the piping.	This has no influence on the dishwasher function. If in doubt, contact a qualified plumber.
The dishes are not clean	• The dishes were not loaded correctly. • The program was not powerful enough.	See the “Preparing And Loading Dishes”. Select a more intensive program.
	• Not enough detergent was dispensed.	Use more detergent, or change your detergent.
	• Items are blocking the movement of the spray arms.	Rearrange the items so that the spray can rotate freely.
	• The filter combination is not clean or is not correctly fitted in the base of wash cabinet. This may cause the spray arm jets to get blocked.	Clean and/or fit the filter correctly. Clean the spray arm jets.
Cloudiness on glassware.	• Combination of soft water and too much detergent.	Use less detergent if you have soft water and select a shorter cycle to wash the glassware and to get them clean.

Problem	Possible reason	Solution
Black or grey marks on dishes	• Aluminium utensils have rubbed against dishes	Use a mild abrasive cleaner to eliminate those marks.
White spots appear on dishes and glasses.	• Hard water area can cause limescale deposits.	Add more detergent.
The dishes aren't drying	• Improper loading	Use gloves if detergent residue can be found on dishes to avoid skin irritations.
	• Dishes are removed too soon	Do not empty your dishwasher immediately after washing. Open the door slightly so that the steam can come out. Take out the dishes until the inside temperature is safe to touch. Unload the lower basket first to prevent the dropping water from the upper basket.
	• Wrong program has been selected.	With a short program, the washing temperature is lower, decreasing cleaning performance. Choose a program with a long washing time.
	• Use of cutlery with a low-quality coating.	Water drainage is more difficult with these items. Cutlery or dishes of this type are not suitable for washing in the dishwasher.

⚠ WARNING

Self-repair or non-professional repair may cause serious risks to the safety of the user of the appliance and impact warranty.

Availability Of Spare Parts

- Seven years after placing the last unit of the model on the market:
  Motor, circulation and drain pump, heaters and heating elements, including heat pumps (separately or bundled), piping and related equipment including all hoses, valves, filters and aqua stops, structural and interior parts related to door assemblies (separately or bundled), printed circuit boards, electronic displays, pressure switches, thermostats and sensors, software and firmware including reset software.
- Ten years after placing the last unit of the model on the market:
  Door hinge and seals, other seals, spray arms, drain filters, interior racks and plastic peripherals such as baskets and lids.

ERROR CODES

If there is a malfunction the dishwasher will display an error code. The following table shows possible error codes and their causes.

Problem	Meanings	Possible Causes
E1	• Longer inlet time.	A flow meter, drain valve, or pump failure, it should be repaired by a qualified worker.
E3	• Not reaching required temperature	Heating tube or thermistor anomaly, it should be repaired by a qualified worker.
E4	• Overflow.	Some element of dishwasher leaks.
Ed	• Communication anomaly	It should be repaired by a qualified worker.

⚠ WARNING

- If overflow occurs, turn off the main water supply before calling a service.
- If there is water in the base pan because of an overfill or small leak, the water should be removed before restarting the dishwasher.
- If there is an error code that cannot be solved, please request professional assistance.

TRADEMARKS, COPYRIGHTS AND LEGAL STATEMENT

Midea logo, word marks, trade name, trade dress and all versions thereof are valuable assets of Midea Group and/or its affiliates (“Midea”), to which Midea owns trademarks, copyrights and other intellectual property rights, and all goodwill derived from using any part of an Midea trademark. Use of Midea trademark for commercial purposes without the prior written consent of Midea may constitute trademark infringement or unfair competition in violation of relevant laws.

This manual is created by Midea and Midea reserves all copyrights thereof. No entity or individual may use, duplicate, modify, distribute in whole or in part this manual, or bundle or sell with other products without the prior written consent of Midea.

All the described functions and instructions were up to date at the time of printing this manual. However, the actual product may vary due to improved functions and designs.

DISPOSAL AND RECYCLING

Important instructions for environment

Compliance with the WEEE Directive and Disposing of the Waster Product:
This product complies with EU WEEE Directive (2012/19/EU). This product bears a classification symbol for waster electrical and electronic equipment (WEEE).

This symbol indicates that this product shall not be disposed with other household wastes at the end of its service life. Used device must be returned to official collection point for recycling of electrical electronic devices. To find these collection systems please contact to your local authorities or retailer where the product was purchased. Each household performs important role in recovering and recycling of old appliance. Appropriate disposal of used appliance helps prevent potential negative consequences for the environment and human health.

Compliance with RoHS Directive

The product you have purchased complies with EU RoHS Directive (2011/65/EU). It does not contain harmful and prohibited materials specified in the Directive.

Package information

Packaging materials of the product are manufactured from recyclable materials in accordance with our National Environment Regulations. Do not dispose of the packaging materials together with the domestic or other wastes. Take them to the packaging material collection points designated by the local authorities.

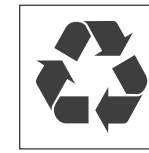

DATA PROTECTION NOTICE

For the provision of the services agreed with the customer,
we agree to comply without restriction with all stipulations of applicable data protection law, in line with agreed countries within which services to the customer will be delivered, as well as, where applicable, the EU General Data Protection Regulation (GDPR).

Generally, our data processing is to fulfil our obligation under contract with you and for product safety reasons, to safeguard your rights in connection with warranty and product registration questions. In some cases, but only if appropriate data protection is ensured, personal data might be transferred to recipients located outside of the European Economic Area.

Further information are provided on request. You can contact our Data Protection Officer via **MideaDPO@midea.com**. To exercise your rights such as right to object your personal date being processed for direct marketing purposes, please contact us via **MideaDPO@midea.com**. To find further information, please follow the QR Code.

make yourself at home

© Midea 2023 all rights reserved

00000000000000

此红框内丝印此用户手册对应的14位物料编码　红色框不需印刷
字体为Gotham-Book　8pt 位置大小严格按图纸操作