Midea

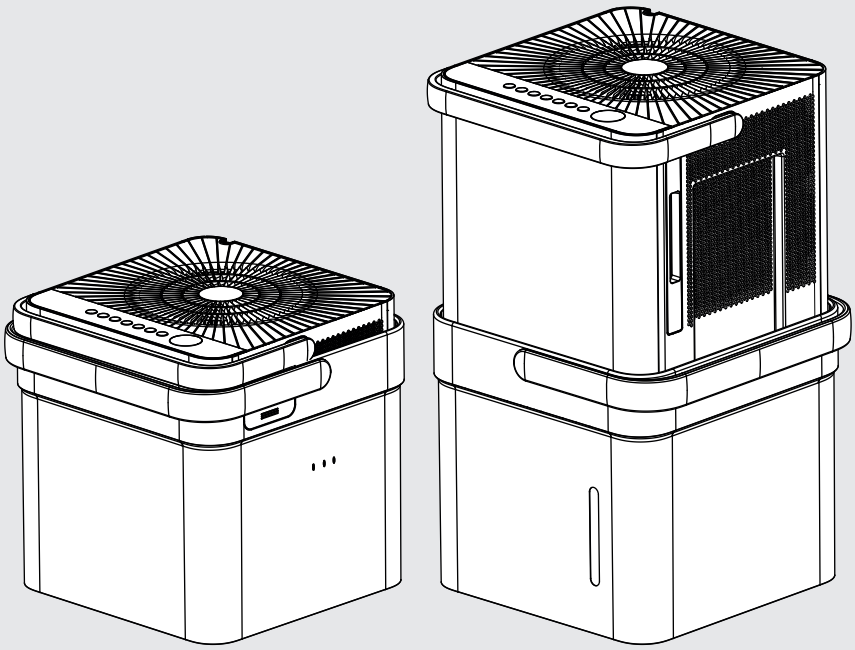

Dehumidifier

MAD

SmartHome

Download the app & activate product

Download on the App Store

GET IT ON Google Play

USER MANUAL

MAD50PE1QWT-B
MAD50PE1QWT-S

Warning notices: Before using this product, please read this manual carefully and keep it for future reference.
The design and specifications are subject to change without prior notice for product improvement.
Consult with your dealer or manufacturer for details.
The diagram above is just for reference. Please take the appearance of the actual product as the standard.

THANK YOU LETTER

Thank you for choosing Midea! Before using your new Midea product, please read this manual thoroughly to ensure that you know how to operate the features and functions that your new dehumidifier offers in a safe way.

CONTENTS

THANK YOU LETTER 2

SAFETY INSTRUCTIONS 3

SPECIFICATIONS AND FEATURES 13

PRODUCT INSTALLATION 14

OPERATION INSTRUCTIONS 22

APP INSTRUCTIONS 25

CLEANING AND MAINTENANCE 29

TROUBLESHOOTING TIPS 31

WARRANTY 32

SAFETY INSTRUCTIONS

Read Safety Precautions Before Operation and Installation To prevent death or injury to the user or other people and property damage, the following instructions must be followed. Incorrect operation due to ignoring of instructions may cause death, harm or damage.

Explanation of Symbols

⚠	**Warning** The signal word indicates a hazard with a medium level of risk which, if not avoided, may result in death or serious injury.
⚠	**Caution** The signal word indicates a hazard with a low degree of risk which, if not avoided, may result in minor or moderate injury.
⃠	**Never do this** This signal indicates the prompt operation is prohibited., if not avoided, may result in Product damaged or injury.
!	**Always do this** This signal means that the operation can be performed.

⚠ WARNING

- Do not exceed the rating of the power outlet or connection device.
- Do not operate or stop the unit by switching on or o the power.
- Do not damage or use an unspecified power cord.
- Do not modify power cord length or share the outlet with other appliances.
- Do not insert or pull out plug with wet hands.
- Do not install the appliance in a location that may be exposed to combustible gas.
- Do not place the unit near a heat source.
- Disconnect the power if strange sounds, smell, or smoke comes from it.
- You should never try to take apart or repair the unit by yourself.
- Before cleaning, turn o the power and unplug the unit.
- Do not use the machine near flammable gas or combustibles, such as gasoline, benzene, thinner, etc.
- Do not drink or use the water drained from the unit.
- Do not take the water bucket out during operation.
- Do not use the unit in small spaces.
- Do not put in places where water may splash onto the unit.
- Place the unit on a level, sturdy section of the floor.
- Do not cover the intake or exhaust openings with cloths or towels.
- Care should be taken when using the unit in a room with the following persons: infants, children, elderly people,and people not senstive to humidity.
- Do not use in areas where chemicals are handled.
- Never insert your finger or other foreign objects into grills or openings. Take special care to warn children of these dangers.
- Do not place heavy object on the power cord and take care so that the cord is not compressed.

- Do not climb up on or sit on the unit.
- Always insert the filters securely. Clean filter once every two weeks.
- If water enters the unit, turn the unit o and disconnect the power , contact a qualified service technician.
- Do not place flower vases or other water container on top of the unit.
- Do not use extension cords.

⚠ CAUTION

- This appliance is not intended for use by persons (including childern) with reduced physical, sensory or mental capabilities or lack of experience and knowledge, unless they have been given supervision or instruction concerning use of the appliance by a person responsible for their safety. Children should be supervised to ensure that they do not play with the appliance.
- If the supply cord is damaged, it must be replaced by the manufacturer, its service agent or similarly qualified persons in order to avoid a hazard.
- Prior to cleaning or other maintenance, the appliance must be disconnected from the supply mains.
- Do not install the appliance in a location that may be exposed to combustible gas. If combustible gas accumulates around the unit, it may cause fire.
- If the appliance is knocked over during use, turn o the unit and unplug it from the main power supply immediately. Visually inspect the unit to ensure there is no damage. If you suspect the unit has been damaged, contact a technician or customer service for assistance.
- In a thunderstorm, the power must be cut o to avoid damage to the machine due to lightning.
- Do not run cord under carpeting. Do not cover cord with throw rugs, runners, or similar coverings. Do not route cord under furniture or appliances. Arrange cord away from tra c area and where it will not be tripped over.
- Do not operate unit with a damaged cord or plug. Discard unit or return to an authorized service facility for examination and/or repair.
- To reduce the risk of fire or electric shock, do not use this fan with any solid-state speed control device.
- The appliance shall be installed in accordance with national wiring regulations.
- Contact the authorised service technician for repair or maintenance of this unit.
- Turn o the product when not in use.
- The manufactures nameplate is located on the rear panel of the unit and contains electrical and other technical data s pecific to this unit.
- Be sure the unit is properly grounded. To minimize shock and fire hazards, proper grounding is important. The power cord is equipped with a three-prong grounding plug for protection against shock hazards.
- Your unit must be used in a properly grounded wall receptacle. If the wall receptacle you intend to use is not adequately grounded or protected by a time delay fuse or circuit breaker(please refer to the nameplate for the electrical data), have a qualified electrician install the proper receptacle.
- Do not operate your air conditioner in a wet room such as a bathroom or laundry room.
- The unit s circuit board(PCB) is designed with a fuse to provide overcurrent protection. specifications of the fuse are printed on the circuit board, such as: T 3.15A/250V (or 350V), etc.

Electronic Work

WARNING:
BEFORE PERFORMING ANY ELECTRICAL OR WIRING WORK, TURN OFF THE MAIN POWER TO THE SYSTEM.

Electronic Type

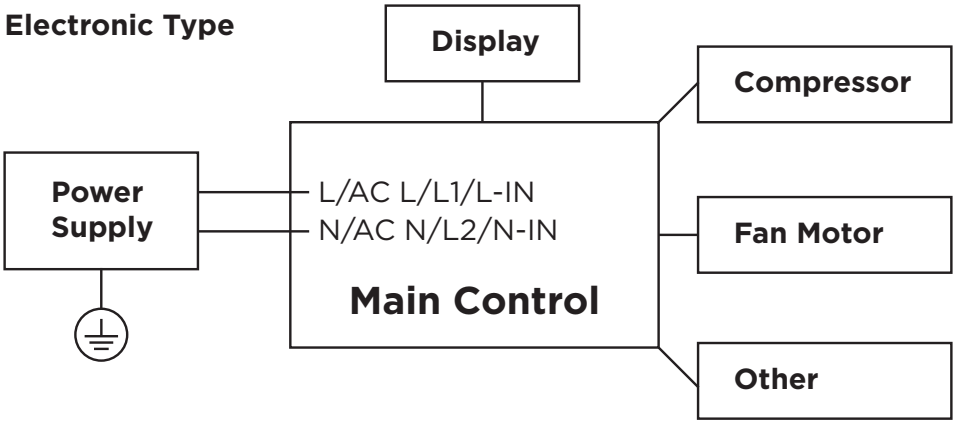

NOTE: Please strictly follow the wiring label attached to the machine for all wiring connections. The wiring diagram may vary for di erent unit. Please refer to the wiring diagram on the machine you have purchased. The above wiring diagram is a simplified version for preliminary illustration purposes only.

SAFETY MANUAL

FOR R32 REFRIGERANT MODEL

North America Products

CAUTION:

Risk of fire

flammable materials

IMPORTANT NOTE: Read this manual carefully before installing or operating your new appliance unit. Make sure to save this manual for future reference.

Explanation of symbols displayed on the unit

	CAUTION	This symbol shows that the operation manual should be read carefully.
	CAUTION	This symbol shows that a service personnel should be handling this equipment with reference to the installation manual.
	CAUTION	This symbol shows that information is available such as the operating manual or installation manual.

WARNING:

- Servicing shall only be performed as recommended by the equipment manufacturer. Maintenance and repair requiring the assistance of other skilled personnel shall be carried out under the supervision of the person competent in the use of flammable refrigerants.
- DO NOT modify the length of the power cord or use an extension cord to power the unit.
- DO NOT share a single outlet with other electrical appliances. Improper power supply can cause fire or electrical shock.
- Please follow the instruction carefully to handle, install, clear, service the appliance to avoid any damage or hazard.

Flammable
Refrigerant R32 is used within appliance.

- When maintaining or disposing the appliance, the refrigerant (R32) shall be recovered properly, shall not discharge to air directly.
- Compliance with national gas regulations shall be observed.
- Keep ventilation openings clear of obstruction.
- The appliance shall be stored so as to prevent mechanical damage from occurring.
- The appliance shall be stored in a well-ventilated area where the room size corresponds to the room area as specified for operation.
- Any person who is involved with working on or breaking into a refrigerant circuit should hold a current valid certificate from an industry-accredited assessment authority, which authorises their competence to handle refrigerants safely in accordance with an industry recognised assessment specification. All training shall follow the ANNEX HH requirements of UL 60335-2-40 4th Edition.

Examples for such working procedures are:
• breaking into the refrigerating circuit;
• opening of sealed components;
• opening of ventilated enclosures.

- No open fire or device like switch which may generate spark/arcing shall be around appliance to avoid causing ignition of the flammable refrigerant used. Please follow the instructions carefully when storing or maintaining the appliance to prevent mechanical damage from occurring.
- Do not use means to accelerate the defrosting process or to clean, other than those recommended by the manufacturer.
- The appliance shall be stored in a room without continuously operating ignition sources (for example: open flames, an operating gas appliance) and ignition sourcesor (for example: an operating electric heater) close to the appliance.
- Do not pierce or burn.
- Be aware that the refrigerants may not contain an odour.

AVERTISSEMENT
Ne pas utiliser de produits permettant d accélérer le dégel ou de produits de nettoyage autres que ceux recommandés par le fabricant.

L’appareil doit être entreposé dans un endroit sans source d allumage fonctionnant en continu (par exemple : flamme nue, appareil au gaz en marche ou radiateur électrique en marche).
Ne pas percer ni bruler. Attention : les frigorigènes peuvent être inodores.

1. **Transport of equipment containing flammable refrigerants**
   See transport regulations.

2. **Marking of equipment using signs**
   See local regulations.

3. **Disposal of equipment using flammable refrigerants**
   See national regulations.

4. **Storage of equipment/appliances**
   The storage of the appliance should be in accordance with the applicable regulations or instructions, whichever is more stringent.

5. **Storage of packed (unsold) equipment**
   Storage package protection should be constructed such that mechanical damage to the equipment inside the package will not cause a leak of the refrigerant charge. The maximum number of pieces of equipment permitted to be stored together will be determined by local regulations.

6. **Information on servicing**

1) Checks to the area
   Prior to beginning work on systems containing flammable refrigerants, safety checks are necessary to ensure that the risk of ignition is minimised. For repair to the refrigerating system, the following precautions shall be complied with prior to conducting work on the system.

2) Work procedure
   Work shall be undertaken under a controlled procedure so as to minimise the risk of a flammable gas or vapour being present while the work is being performed.

3) General work area
   All maintenance staff and others working in the local area shall be instructed on the nature of work being carried out. Work in confined spaces shall be avoided. The area around the workspace shall be sectioned off. Ensure that the conditions within the area have been made safe by control of flammable material.

4) Checking for presence of refrigerant
   The area shall be checked with an appropriate refrigerating detector prior to and during work, to ensure the technician is aware of potentially flammable atmospheres. Ensure that the leak detection equipment being used is suitable for use with flammable refrigerants, i.e. non-sparking, adequately sealed or intrinsically safe.

5) Presence of fire extinguisher
   If any hot work is to be conducted on the refrigeration equipment or any associated parts, appropriate fire extinguishing equipment shall be available to hand. Have a dry powder or CO_2 fire extinguisher adjacent to the charging area.

6) No ignition sources
No person carrying out work in relation to a refrigerating system which involves exposing any pipe work that contains or has contained flammable refrigerant shall use any sources of ignition in such a manner that it may lead to the risk of fire or explosion. All possible ignition sources, including cigarette smoking, should be kept sufficiently far away from the site of installation, repairing, removing and disposal, during which flammable refrigerant can possibly be released to the surrounding space. Prior to work taking place, the area around the equipment is to be surveyed to make sure that there are no flammable hazards or ignition risks. No Smoking signs shall be displayed.

7) ventilated area
Ensure that the area is in the open or that it is adequately ventilated before breaking into the system or conducting any hot work. A degree of ventilation shall continue during the period that the work is carried out. The ventilation should safely disperse any released refrigerant and preferably expel it externally into the atmosphere.

8) Checks to the refrigerating equipment
Where electrical components are being changed, they shall be fit for the purpose and to the correct specifications. At all times the manufacturer's maintenance and service guidelines shall be followed. If in doubt consult the manufacturer's technical department for assistance. The following checks shall be applied to installations using flammable refrigerants: the actual refrigerant charge is in accordance with the room size within which the refrigerant containing parts are installed; the ventilation machinery and outlets are operating adequately and are not obstructed; if an indirect refrigerating circuit is being used, the secondary circuit shall be checked for the presence of refrigerant; marking to the equipment continues to be visible and legible. markings and signs that are illegible shall be corrected; and refrigerating pipe or components are installed in a position where they are unlikely to be exposed to any substance which may corrode refrigerant containing components, unless the components are constructed of materials which are inherently resistant to being corroded or are suitably protected against being so corroded.

9) Checks to electrical devices
Repair and maintenance to electrical components shall include initial safety checks and component inspection procedures. If a fault exists that could compromise safety, then no electrical supply shall be connected to the circuit until it is satisfactorily dealt with. If the fault cannot be corrected immediately but it is necessary to continue operation, an adequate temporary solution shall be used. This shall be reported to the owner of the equipment so all parties are advised. Initial safety checks shall include:
That capacitors are discharged: this shall be done in a safe manner to avoid possibility of sparking; that there no live electrical components and wiring are exposed while charging, recovering or purging the system; that there is continuity of earth bonding.

7. **Sealed electrical components shall be replaced.**

8. **Intrinsically safe components must be replaced.**

9. **Cabling**

Check that cabling will not be subject to wear, corrosion, excessive pressure, vibration, sharp edges or any other adverse environmental effects. The check shall also take into account the effects of aging or continual vibration from sources such as compressors or fans.

10. **Detection of flammable refrigerants**

Under no circumstances shall potential sources of ignition be used in the searching for or detection of refrigerant leaks. A halide torch (or any other detector using a naked flame) shall not be used.

The following leak detection methods are deemed acceptable for systems containing flammable refrigerants. Electronic leak detectors shall be used to detect flammable refrigerants, but the sensitivity may not be adequate, or may need re-calibration. (Detection equipment shall be calibrated in a refrigerant-free area.)
Ensure that the detector is not a potential source of ignition and is suitable for the refrigerant used. Leak detection equipment shall be set at a percentage of the LFL of the refrigerant and shall be calibrated to the refrigerant employed and the appropriate percentage of gas (25% maximum) is confirmed. Leak detection fluids are suitable for use with most refrigerants but the use of detergents containing chlorine shall be avoided as the chlorine may react with the refrigerant and corrode the copper pipe-work.
If a leak is suspected, all naked flames shall be removed/extinguished. If a leakage of refrigerant is found which requires brazing, all of the refrigerant shall be recovered from the system, or isolated (by means of shut off valves) in a part of the system remote from the leak. Removal of refrigerant shall be according to Removal and evacuation.

11. **Removal and evacuation**

When breaking into the refrigerant circuit to make repairs—or for any other purpose - conventional procedures shall be used. However, for flammable refrigerants it is important that best practice be followed, since flammability is a consideration. The following procedure shall be adhered to:
-Safely remove refrigerant following local and national regulations;
-Evacuate;
-Purge the circuit with inert gas (optional for A2L);
-Evacuate (optional for A2L);
-continuously flush or purge with inert gas when using flame to open circuit; and
-open the circuit.
The refrigerant charge shall be recovered into the correct recovery cylinders if venting is not allowed by local and national codes. For appliances containing flammable refrigerants, the system shall be purged with oxygen-free nitrogen to render the appliance safe for flammable refrigerants. This process might need to be repeated several times. Compressed air or oxygen shall not be used for purging refrigerant systems.

For appliances containing flammable refrigerants, refrigerants purging shall be achieved by breaking the vacuum in the system with oxygen-free nitrogen and continuing to fill until the working pressure is achieved, then venting to atmosphere, and finally pulling down to a vacuum (optional for A2L). This process shall be repeated until no refrigerant is within the system (optional for A2L). When the final oxygen-free nitrogen charge is used. the system shall be vented down to atmospheric pressure to enable work to take place.
The outlet for the vacuum pump shall not be close to any potential ignition sources, and ventilation shall be available.

12. Charging procedures

In addition to conventional charging procedures, the following requirements shall be followed. Ensure that contamination of different refrigerants does not occur when using charging equipment. Hoses or lines shall be as short as possible to minimise the amount of refrigerant contained in them. Cylinders shall be kept in an appropriate position according to the instructions. Ensure that the refrigeration system is earthed prior to charging the system with refrigerant. Label the system when charging is complete (if not already). Extreme care shall be taken not to overfill the refrigeration system. Prior to recharging the system it shall be pressure tested with OFN. The system shall be leak tested on completion of charging but prior to commissioning. A follow up leak test shall be carried out prior to leaving the site.

13. Decommissioning

Before carrying out this procedure, it is essential that the technician is completely familiar with the equipment and all its detail. It is recommended good practice that all refrigerants are recovered safely. Prior to the task being carried out, an oil and refrigerant sample shall be taken in case analysis is required prior to re-use of reclaimed refrigerant. It is essential that electrical power is available before the task is commenced.

a) Become familiar with the equipment and its operation.
b) Isolate system electrically.
c) Before attempting the procedure ensure that: mechanical handling equipment is available, if required, for handling refrigerant cylinders; all personal protective equipment is available and being used correctly; the recovery process is supervised at all times by a competent person; recovery equipment and cylinders conform to the appropriate standards.
d) Pump down refrigerant system, if possible.
e) If a vacuum is not possible, make a manifold so that refrigerant can be removed from various parts of the system.
f) Make sure that cylinder is situated on the scales before recovery takes place.
g) Start the recovery machine and operate in accordance with instructions.
h) Do not overfill cylinders. (No more than 80% volume liquid charge.)
i) Do not exceed the maximum working pressure of the cylinder, even temporarily.
j) When the cylinders have been filled correctly and the process completed, make sure that the cylinders and the equipment are removed from site promptly and all isolation valves on the equipment are closed off.
k) Recovered refrigerant shall not be charged into another refrigeration system unless it has been cleaned and checked.

14. Labelling

Equipment shall be labelled stating that it has been de-commissioned and emptied of refrigerant. The label shall be dated and signed.
Ensure that there are labels on the equipment stating the equipment contains flammable refrigerant.

15. Recovery

When removing refrigerant from a system, either for servicing or decommissioning, it is recommended good practice that all refrigerants are removed safely.
When transferring refrigerant into cylinders, ensure that only appropriate refrigerant recovery cylinders are employed. Ensure that the correct number of cylinders for holding the total system charge is available. All cylinders to be used are designated for the recovered refrigerant and labelled for that refrigerant (i.e., special cylinders for the recovery of refrigerant). Cylinders shall be complete with pressure-relief valve and associated shut-off valves in good working order. Empty recovery cylinders are evacuated and, if possible, cooled before recovery occurs.

The recovery equipment shall be in good working order with a set of instructions concerning the equipment that is at hand and shall be suitable for the recovery of the flammable refrigerant. If in doubt, the manufacturer should be consulted. In addition, a set of calibrated weighing scales shall be available and in good working order. Hoses shall be complete with leak-free disconnect couplings and in good condition.

The recovered refrigerant shall be processed according to local legislation in the correct recovery cylinder, and the relevant waste transfer note arranged. Do not mix refrigerants in recovery units and especially not in cylinders.

If compressors or compressor oils are to be removed, ensure that they have been evacuated to an acceptable level to make certain that flammable refrigerant does not remain within the lubricant. The compressor body shall not be heated by an open flame or other ignition sources to accelerate this process. When oil is drained from a system, it shall be carried out safely.

SPECIFICATIONS AND FEATURES

Product overview

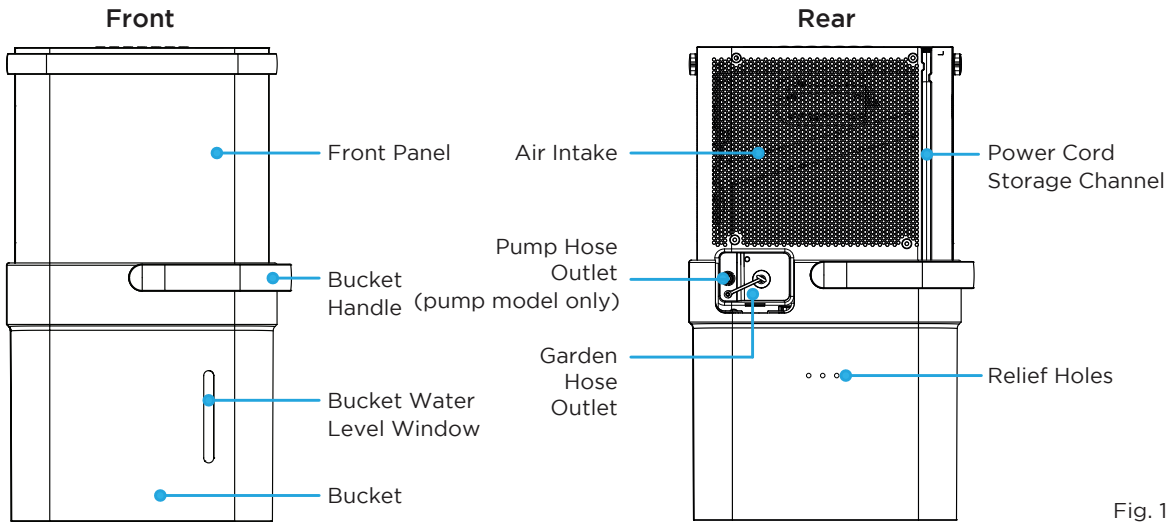

Fig. 1

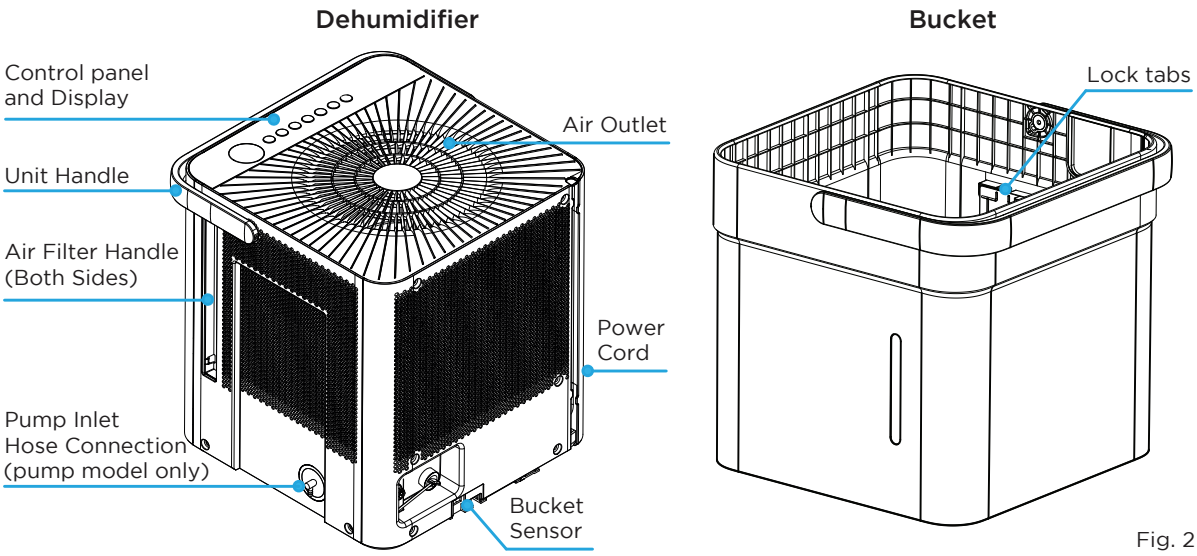

Fig. 2

Accessories

Pump drain hose (only for units with the drain pump feature)	
Pump inlet hose (only for units with the drain pump feature)	
Normal drain hose	

PRODUCT INSTALLATION

Positioning the Unit

The dehumidifier should be placed in the area where dehumidification is desired most. Adjacent rooms in which dehumidification is also desired should allow adequate airflow in and out of the space containing the dehumidifier.

- Do not use outdoors.
- This dehumidifier is intended for indoor residential applications only. This dehumidifier should not be used for commercial or industrial applications.
- Place the dehumidifier on a smooth, level floor strong enough to support the unit with a full bucket of water.
- Allow at least 8” of air space on all sides of the unit for air circulation (at least 16” for air outlet).
- Place the unit in an area where the temperature will not fall below 41°F (5°C). The coils can become covered with frost at lower temperatures, which may reduce performance.
- Place the unit away from any clothes dryer, heater or radiator.
- Close all doors, windows, and other openings to the outdoors in the room.

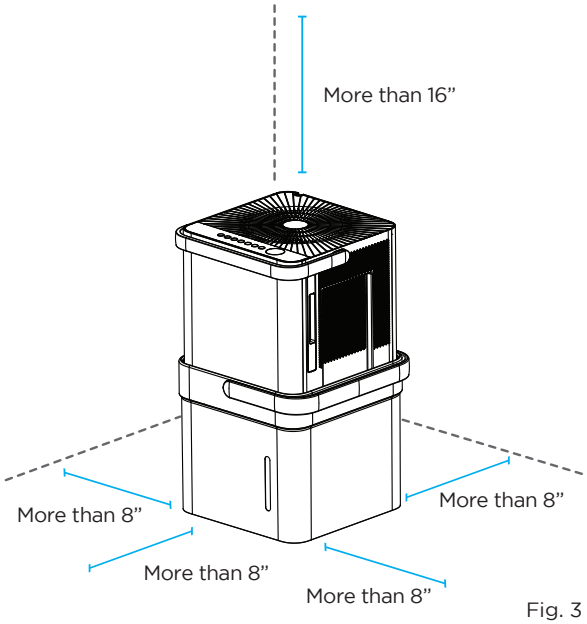

Fig. 3

Optional Caster Installation

To install the casters:

1. Remove the Dehumidifier from the bucket.
2. Slide each caster into the slot on the bucket’s bottom corner as shown below.
3. Place the retaining block into the slot to hold the caster in place.
4. Repeat this for each corner of the bucket until all 4 casters are installed.

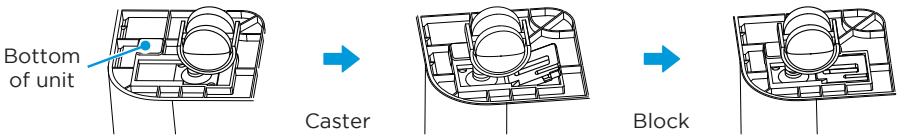

Fig. 4

To remove the casters:

1. Use a flathead screwdriver to actuate the tab on the retaining block.
2. Remove the retaining block and slide the casters out of the slot on the bucket.

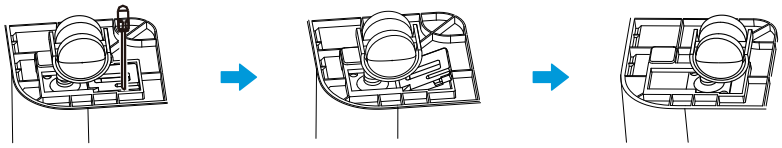
Fig. 5

NOTE

With the casters attached, do not move the unit and bucket assembly while there is water in the bucket. Before rolling the bucket, remove the unit.

Midea Cube Installation Modes and Installation Video

The Midea Cube dehumidifier can be installed in 4 different modes – Bucket Mode, Bucketless Mode, Continuous Draining, and Drain Pump Mode (pump model only)

Scan this QR code with your mobile device to watch an installation video of the Midea Cube that walks through all four installation modes.

Bucket Mode - Set Up Instructions (Install Video Time 0:36)

Step 1:

Separate dehumidifier & bucket from the nested shipping/storage position. Remove all packaging materials from the unit.

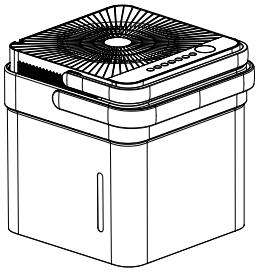

Nested Shipping & Storage Position

Fig. 6a

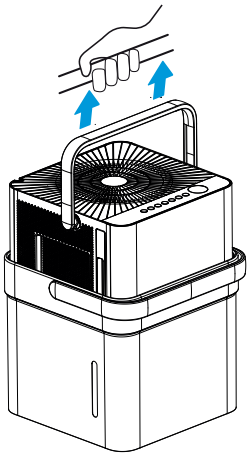

Fig. 6b

Step 2:

Rotate dehumidifier 90° and align the arrows on the two labels (one on the bucket and one on the dehumidifier) and carefully sit the dehumidifier down onto the bucket.

The water level window in the bucket and the user interface buttons on the dehumidifier should be on the same side when properly stacked. Check to ensure the arrows on the unit and bucket are aligned as in Fig. 7c for proper operation.

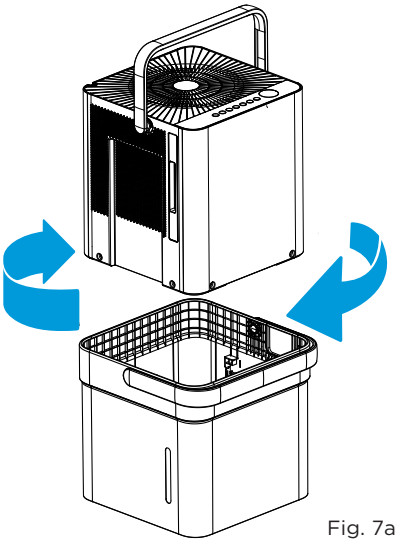

Fig. 7a

Rotate dehumidifier 90°

User Interface Buttons and Water Level Window Aligned on the Same Side

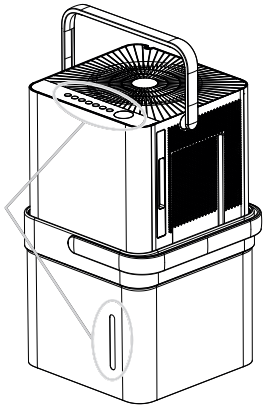

Fig. 7b

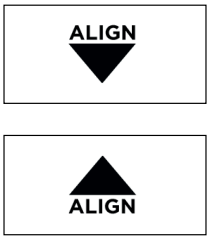

Fig. 7c

Step 3:

Plug the unit in and press the power button and the unit is ready to run in normal (bucket) mode.

NOTE

See page 22 for operating instructions.

Emptying the Bucket (Time 2:56)

- When the bucket reaches the set Fill Level, the unit's display will show P2 regardless of power status
- Using proper lifting techniques, remove the unit from the bucket. Be aware, some residual water may spill from the bottom of the unit while not on the bucket.
- Using two hands, grab the bucket handle and carry it to the desired drainage point. Pouring from a front corner of the bucket (the bucket window is on the front side), empty the bucket. If pouring from the back of the bucket, some water may spill from the relief holes.
- Return the bucket to the desired operating location and place the unit back on the bucket. Be sure the unit is aligned properly

NOTE

- When you remove the unit from the bucket do not set the unit on any electrical components as the bottom may be wet
- Do not set the unit on an uneven surface after removing it from the bucket
- Ensure the unit is seated properly after returning it to the bucket
- If the unit is removed from the bucket during operation, the display will show the error code Eb and cease operation until returned to the bucket or changed to bucketless mode.

1. Lift the unit off the bucket and place it on a level surface.

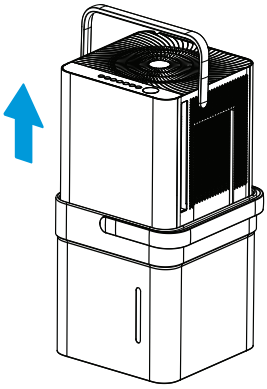

Fig. 8

2. Lift the bucket using 2 hands and carry it to a drainage point.
3. Pour out all the water.

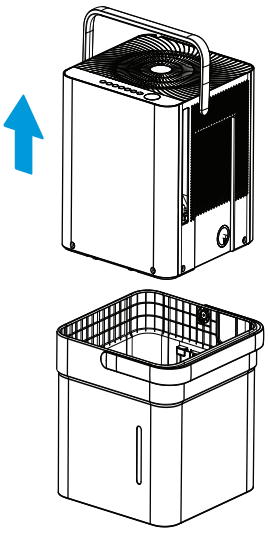

Fig. 9

Bucketless Mode – Set Up Instructions (Install Video Time 3:32)

Bucketless mode allows you to run the unit in continuous drain mode without the bucket in place, best for use in smaller spaces.

NOTE

Bucketless mode must be enabled within 3 minutes of plugging in the dehumidifier, so it is best to set up the unit for this operation before powering on the unit.In Bucketless mode, the bucket capacity can't be selected and the unit can't turn on PUMP feature.

Step 1:

Set the unit directly on the surface or floor of the area to be dehumidified. Remove the drain cap from the continuous drain port at the back of the unit.

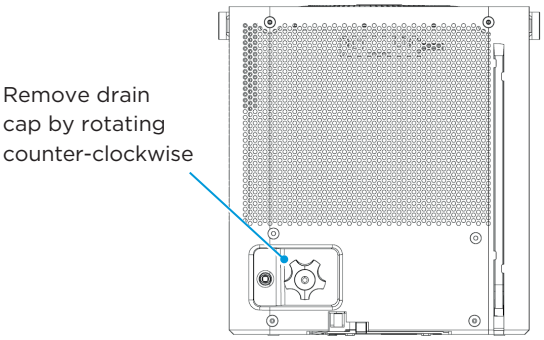

Fig. 10

Step 2:

Insert the continuous drain hose into the continuous drain port at the back of the unit. Set the other end of the hose in the drain, ensuring the hose slopes down and does not raise above the drain port.

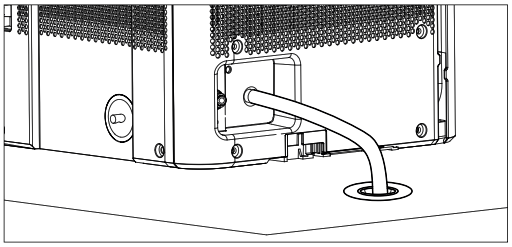

Fig. 11

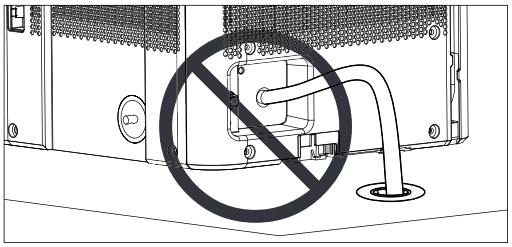

Fig. 12

Step 3:

Plug in the dehumidifier. Press the UP (∧) and FILL LEVEL buttons simultaneously for 3 seconds. The bucketless mode icon will appear in the bottom right of the display when the unit is ready to operate in bucketless mode (see UI on page 22 for example).

To remove the unit from bucketless mode, place the unit back on the bucket.

Put on the rubber plug of the drain hole.

NOTE

See page 22 for operating instructions.

Continuous Draining - Set Up Instructions (Install Video Time 4:39)

Step 1:

Before placing the unit on the bucket, remove the continuous drain cover from the back of the bucket. Make sure to keep the cover if you ever plan to change operating modes.

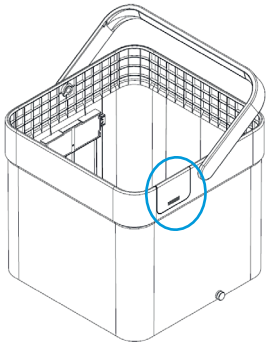

Fig. 13a

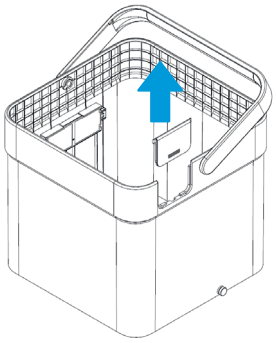

Fig. 13b

Step 2:

Place the unit onto the bucket. Remove the continuous drain plug cover and insert the included continuous drain hose. You can also attach and use a garden hose by screwing it on to the drain port. Check to make sure the hose is properly seated.

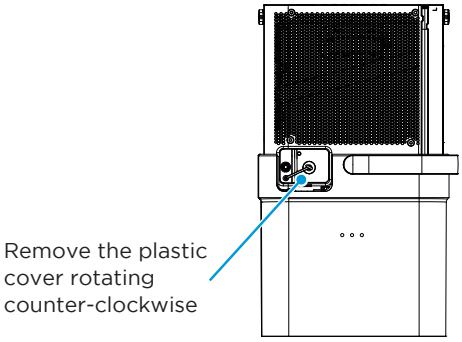

Fig. 14

Step 3:

Place the other end of the drain hose on or in the drain. Ensure the unit is placed at a height where the unit drain port is above the drain hose outlet. This will ensure proper draining.

Note that the bucket fill level LEDS do not operate when the continuous drain hose is installed.

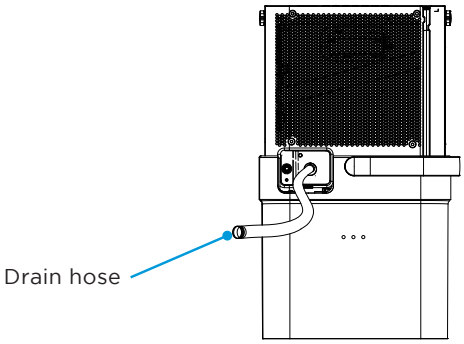

Fig. 15

NOTE

See page 22 for operating instructions.

Drain Pump Mode - Set Up Instructions (Install Video Time 5:43)

Step 1:

Before placing the unit on the bucket, remove the continuous drain cover from the back of the bucket. Make sure to keep the cover if you ever plan to change operating modes.

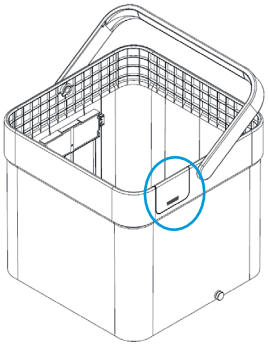

Fig. 16a

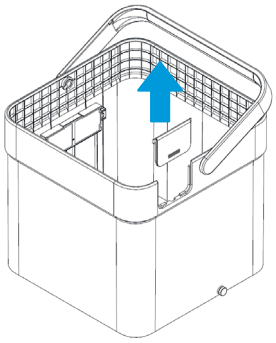

Fig. 16b

Step 2:

Install the pump inlet hose by pressing the hose fitting into the connection located on the side of the unit. Rotate the fitting in the connection 90 degrees to lock it in place and ensure it is fully seated.

Step 3:

Lift the dehumidifier and set it onto the bucket. Make sure the unit is properly aligned with the bucket and that the pump sits inside the bucket. The pump must be placed in the bucket in order to pump water out of the bucket.

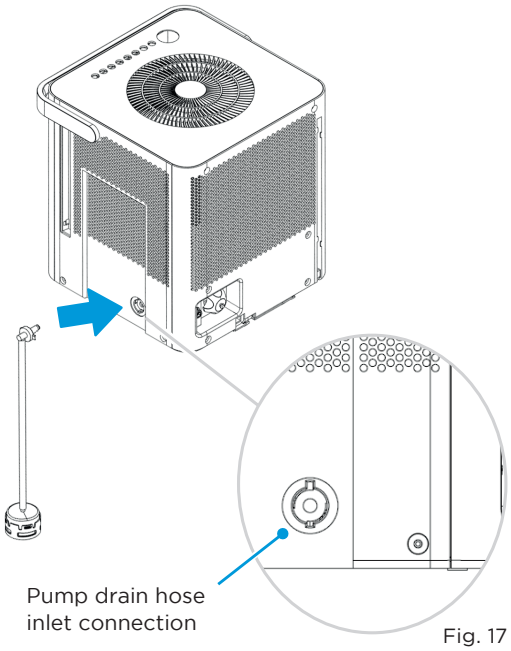

Fig. 17

NOTE

The pump will not activate until the water reaches the level 4 fill level inside the bucket. When the pump stops running, some water will remain in the bucket - this is to keep the pump inlet submerged and prevent the pump from pumping air, which can cause damage to the pump.

Step 4:

Insert the pump drain hose to the back of the dehumidifier, using the connection next to the continuous drain port. Check to make sure the pump drain hose is fully seated in the pump drain connector.

NOTE

To remove the pump hose, push in on the collar around the hose while pulling the hose out.

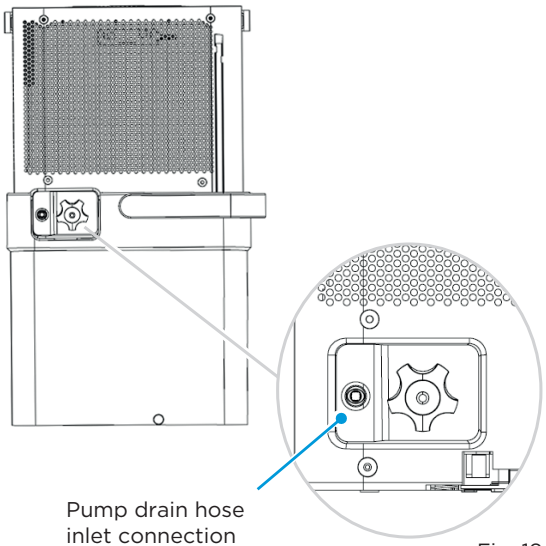

Fig. 18

Step 5:

Set the other end of the pump drain hose in the desired drain location, noting that the pump can pump up to 14 feet above the drain port to an elevated drain location.

Step 6:

Initiate pump mode by pressing the FILL LEVEL button simultaneously for 3 seconds. The pump indicator will appear at the top left of the unit's display when the unit is ready to operate in pump mode (see UI on page 22 for example). Note that the bucket fill level LEDs do not operate when the pump drain hose is installed.

NOTE

The pump may generate a loud noise for the first 3 to 5 minutes of operation.

NOTE

The pump operation light blinks when a failure occurs. Please turn off the unit and disconnect the power cord.

Check the following items:

- Cleaning the pump filter.
  - Refer to "Cleaning and Maintenance" section for details on cleaning the pump filter.
- Check if the drain hose is clean and free of debris.
- Empty the water from the bucket.
- Check the hose connection and the bucket for proper fitment. If the error persists, contact customer service.

NOTE

If routing the drain hose outdoors, do not operate when the outdoor temperature is at or below 32°F (0°C) as the water will freeze, blocking the hose and causing the unit to stop.

Make sure to empty the bucket at least once a week when using the pump draining feature. When the pump draining feature is not being used, remove the pump drain hose from the outlet.

OPERATION INSTRUCTIONS

Control Panel Features

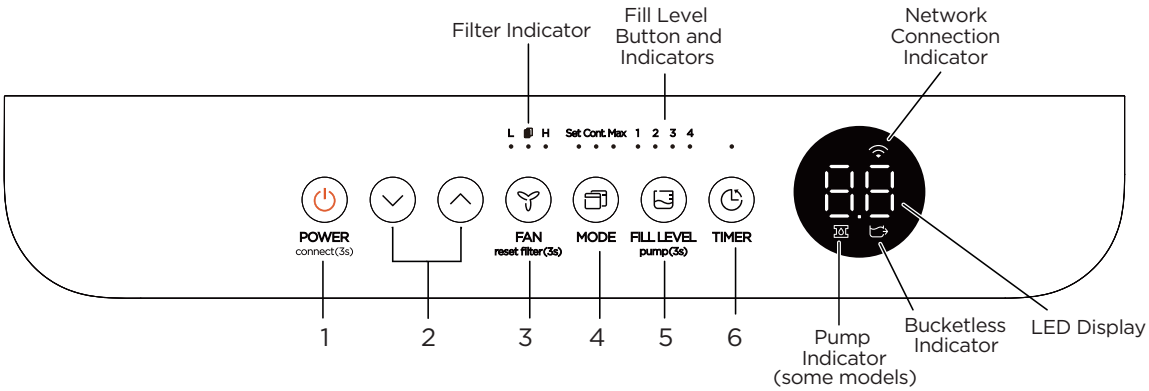

		Description
1	ON / OFF	• Press to turn unit on or off. • Press for 3 sec to initiate smart connection mode.
2	UP / DOWN Buttons	• Press to set humidity and timer.
3	FAN Button	• Press to select the Fan Speed in two steps - High and Low. • Press for 3 sec to turn off the cleaning filter reminder.
4	MODE Button	• Press to choose operating mode in a sequence that goes from Set, Max and Cont.
5	FILL LEVEL Button	• Press this button to change the water level at which the bucket full switch activates. • Press for 3 sec to activate pump mode.
6	TIMER Button	• Press to turn unit Auto Start/Stop.

NOTE

The appearance of the control panel on your unit may vary slightly. Functions will be similar.

NOTE

Control Pads: When you push the button to change operation modes, the unit will make a beep sound to indicate that it is changing modes.

1. POWER BUTTON (ON/OFF):

Press to turn the dehumidifier on and off.

CONNECT:

Holding the power button for 3 seconds will place the unit in network connection mode to setup wireless control.

2. UP (∧) AND DOWN (∨) BUTTONS:

Press these buttons to adjust the setpoint or to set the time feature.

3. FAN BUTTON:

Press this button to change the fan speed between High and Low.

FILTER RESET:

To reset the change filter indicator, hold the fan button for 3 seconds.

4. MODE BUTTON:

Press this button to change the mode of the dehumidifier between Set mode, Max mode, and Continuous run mode.

Set – When the unit is running, the LED display will show the current room humidity. Press either the UP or DOWN button once to see the current set point, and press the UP or DOWN button again to change the set point in 5% increments. The dehumidifier runs until the humidity set point has been reached. The dehumidifier will begin running once the humidity rises above the set point again.

Max – The dehumidifier will run continuously on High Fan.

Continuous – The dehumidifier will run continuously and the fan speed can be changed in this operating mode.

NOTE

While operating on continuous and Max modes, the humidity setpoint cannot be adjusted manually.

5. FILL LEVEL BUTTON:

The FILL LEVEL BUTTON allows you to change the required water level before the bucket full switch activates. Press the FILL LEVEL button once to see the current setting, and press the button again to toggle through the different set levels to adjust the setting. The options will fill approximately to the amounts shown in the table below:

Fill level	Models MAD50PE1QWT-B MAD50PE1QWT-S
1	/
2	/
3	/
4	4.23 gallons

Choose the option which is most comfortable for you when emptying the bucket.

When the bucket is full, the Display will show P2. The weights above are approximate weights of the bucket when filled with the corresponding volume of water.

NOTE

For accurate fill levels, ensure the bucket is empty before beginning operation.

Pump:
Holding the fill level button for 3 seconds will activate pump mode if the bucket is in place (pump model only).

6. TIMER BUTTON:

Press this button to activate the Timer function. The Timer LED will illuminate indicating timer mode is being set. 0.0 will also appear on the display indicating the number of hours from now until the timer function will initiate. When the timer function initiates, the unit will change its power state.

- When activating the Timer function, you are setting the time until the unit changes its power state. This means, if the unit is on, activating the timer function will set the time until the unit will turn off. If the unit is off, activating the timer function will set the time until the unit will turn on.
- The time can be set after pressing the timer button then using the up or down buttons. These buttons will change the time in 0.5 hour increments up to 10 hours. After 10 hours, the time will change in 1 hour increments up to 24.
- If an error code appears during this time, the timer function will be cancelled.

LED Display

Shows the set humidity or auto start/stop time (0 ~ 24h), also shows error and protection codes.

Error Codes and Protection Code:

AS - Humidity sensor error - Unplug the unit and plug it back in. If error persists, contact Customer Service.

ES - Tube Temperature sensor of the evaporator error - Unplug the unit and plug it back in. If error persists, contact Customer Service.

P2 - Bucket has reached the set Fill Level – Empty the bucket and place the unit on the bucket properly.

EC - Refrigerant leakage detection - Display area will show EC when the unit detects refrigerant leakage. If error persists, contact Customer Service.

E3 - Unit malfunction - Unplug the unit and plug it back in. If error persists, contact Customer Service.

Eb - Bucket is removed or not in right position - Replace the bucket in the right position. (only available for the unit with pump feature.)

Other Features

AUTO DEFROST

When frost builds up on the evaporator coils, the compressor will cycle off and Auto Defrost function will run automatically.

3 MINUTE COMPRESSOR OPERATION DELAY PROTECTION

After the unit has stopped, it can not be restarted in the first 3 minutes to protect compressor operation. The unit will restart automatically after 3 minutes.

AUTO-RESTART

If the unit stops unexpectedly due to power being cut, it will restart with the previous function setting (except bucketless mode) automatically when the power resumes.

NOTE

- When first using the dehumidifier, operate the unit continuously 24 hours. Make sure the plastic cover on the continuous drain hose outlet is installed properly so there are no leaks.
- This unit is designed to operate in a working environment between 5°C/41°F and 35°C/95°F.
- Make sure the water bucket is positioned correctly so that the unit can operate properly. When the water in the bucket reaches a certain level, please be careful while moving the unit to avoid spilling.

APP INSTRUCTIONS

Specification of Wireless Module

Model: US-SK105	**Dimensions:** 41 x 24 x 5 (mm)
Antenna Type: Printed PCB Antenna	**Operation Temperature:** 0°C ~ 45°C / 32°F ~ 113°F
Frequency: WLAN 2400-2483.5 MHz	**Operation Humidity:** 10% ~ 85%
Maximum Transmitted Power: <20 dBm Max	**Power Input:** DC 5V/500 mA

Precautions

App Compatibility:

- The app is available for both iOS and Android, however older versions may no longer be compatible. Please keep the app updated with the latest version. Midea makes no guarantee of compatibility and is not responsible for issues arising as a consequence thereof.

Wireless Security:

- The Smart Kit supports the following security protocols: WPA-PSK / WPA2-PSK / WPA3-SAE.
- It may be used with or without encryption although encryption is strongly recommended.

Connectivity:

- Network issues may occasionally cause timeouts. The unit display and the app may become unsynchronized but this will resolve itself when the network is restored.
- Should the network remain unavailable, it might be necessary to run the configuration process again.
- Change in the wireless network will require reconfiguration of the device.

Configuration:

- The actual network configuration process may vary slightly from the manual.
- Please check the service website for more information.

NOTE

Midea will not be responsible for any problems that could be caused by incompatibility or network issues, your wireless router and mobile phone.

Using the SmartHome App

⚠ CAUTION

Ensure that your mobile phone is connected to the wireless network. Bluetooth must be turned on. The device must also be powered up.

Step 1: Download the SmartHome app

Scan the QR code below to download the SmartHome app from app store or search for it directly on the Google Play Store or Apple's App Store.

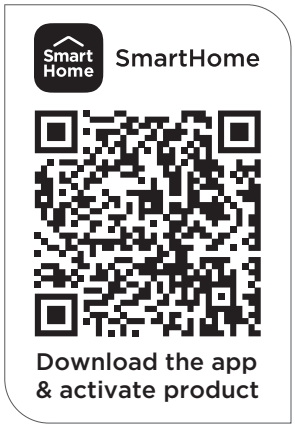

Step 2: Log in

Open the SmartHome app. Log in directly if you have an existing SmartHome account or create a new account. Alternatively, you can also use a 3rd party login platform.

Step 3: Connecting the device

1) When you log in, you may see the message "Smart devices discovered nearby". Tap to add your device.

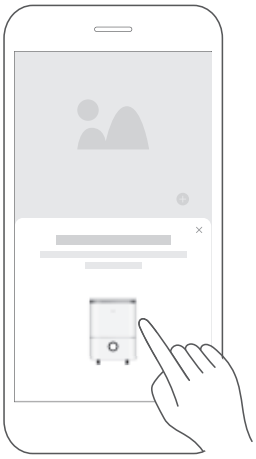

2) If no such message appears, proceed as follows:

Tap on “+” and select your device in the list of nearby available devices.

If your device is not listed, please add your device manually, first selecting the device category e.g. Dehumidifier.

3) Follow the steps in the app to connect your device to the wireless network. If your device fails to connect, follow the additional instructions in the app.

Step 4: Controlling the device

After pairing successfully, a card will be created for the device in the SmartHome app.

Shortcuts for basic functions will appear on the card such as changing the humidity or switching the device on or off.

Tapping on the card, will reveal additional features and settings.

The actual design may look different from examples due to app updates.

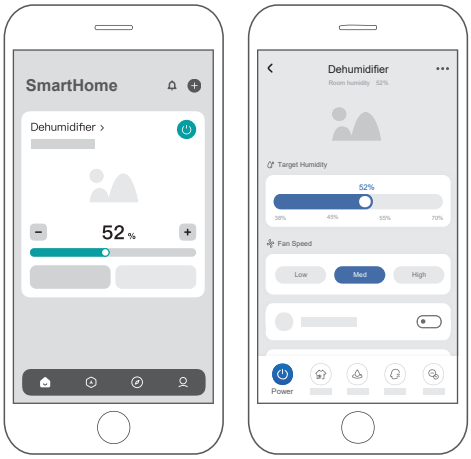

Compliance

We, hereby declare that this dehumidifier is in compliance with the relevant provisions of RE Directive 2014/53/EU. A copy of the full DoC is attached (Europen Union products only).

Wireless module models:
US-SK105:
FCC ID: 2ADQOMDNA21
IC: 12575A-MDNA21

This device complies with Part 15 of the FCC Rules and it contains licence exempt transmitter(s) / receiver(s) that comply with Innovation, Science and Economic Development Canada's licence-exempt RSS(s).
Operation is subject to the following two conditions:

(1) This device may not cause harmful interference;

(2) This device must accept any interference, including interference that may cause undesired operation of the device.

Only operate the device in accordance with the instructions supplied.
Changes or modifications to this unit not expressly approved by the party responsible for compliance could void the user's authority to operate the equipment.

This device complies with FCC radiation exposure limits set forth for an uncontrolled environment. In order to avoid the possibility of exceeding the FCC radio frequency exposure limits, human proximity to the antenna shall not be less than 20cm (8 in) during normal operation.

NOTE

These limits are designed to provide reasonable protection against harmful interference in a residential installation. This equipment generates, uses and can radiate radio frequency energy and, if not installed and used in accordance with the instructions, may cause harmful interference to radio communications.
However, there is no guarantee that interference will not occur in a particular installation. If this equipment does cause harmful interference to radio or television reception, which can be determined by turning the equipment off and on, the user is encouraged to try to correct the interference by one or more of the following measures:

- Reorient or relocate the receiving antenna.
- Connect the equipment into an outlet on a circuit different from that to which the receiver is connected.
- Consult the dealer or an experienced radio/TV technician for help.

CLEANING AND MAINTENANCE

Turn the dehumidifier off and disconnect the plug from the power source before cleaning.

1. Clean the Grill and Case

- Use water and a mild detergent. Do not use bleach or abrasives.
- Do not splash water directly onto the unit. Doing so may cause an electrical shock, cause the insulation to deteriorate, or cause the unit to rust.
- The air intake and outlet may get dirty during operation, use a vacuum cleaner or brush to clean.

2. Clean the Bucket

- Every few weeks, clean the bucket thoroughly to prevent growth of mold, mildew and bacteria. Partially fill the bucket with clean water and mild detergent. Swish it around in the bucket, empty and rinse.

NOTE

Do not use a dishwasher to clean the bucket.

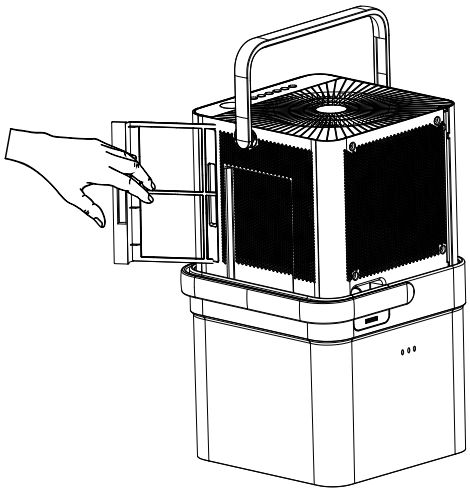

Fig. 19

3. Clean the Air Filter

- To remove the filter, pull each filter outwards (See Fig. 19).
- Wash the filter with clean water then dry.
- Re-install each filter.
- Reset the filter indicator light following operating instructions on page 22.

4. Clean the Pump Filter *(pump models only)*

- To clean the pump filter, turn off and unplug the unit. Remove it from the bucket. Set it on a flat surface away from any electrical components. You can set the unit near a sink to easily rinse the filter.
- Rinse the pump filter with clean water to remove any dust or debris that may have collected on the mesh screen inside. Instead of rinsing, you can also clean the filter and screen with a soft brush or sponge.

⚠ CAUTION

To avoid loss of performance or damage to the unit, do not operate the dehumidifier without the filters.

5. When Not Using the Unit for Long Time Periods

- Before storing the unit and bucket, let it rest for one full day so that the system can dry out naturally.
- Clean the unit, water bucket and air filter.
- Ensure the power cord is in the power cord storage channel.
- Nest the unit inside the bucket.
- Cover the unit with a plastic bag.
- Store the unit upright in a dry, well-ventilated area.

Nesting and Storing Instructions

Step 1:

Power off and unplug the unit. Then lift the dehumidifier off the bucket.

Step 2:

Empty all water from bucket.

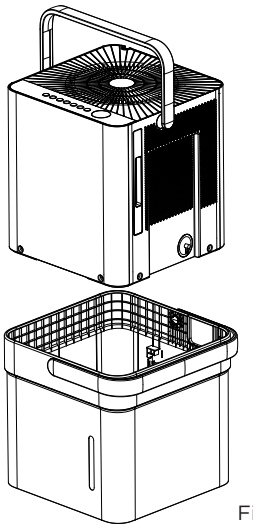

Fig. 20

⚠ WARNING

Make sure the bucket is empty before nesting the dehumidifier to avoid risk of electrical shock.

Step 3:

Make sure to press the tabs on the inside bucket feature in so that the unit can nest correctly. See Fig. 21.

Step 4:

Rotate dehumidifier 90° in either direction and insert into bucket to nest.

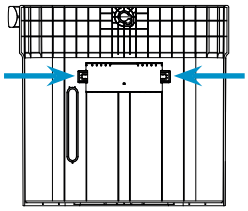

Fig. 21

NOTE

Make sure the power cord is properly tucked into the power cord storage channel on the back of the dehumidifier to prevent damage.

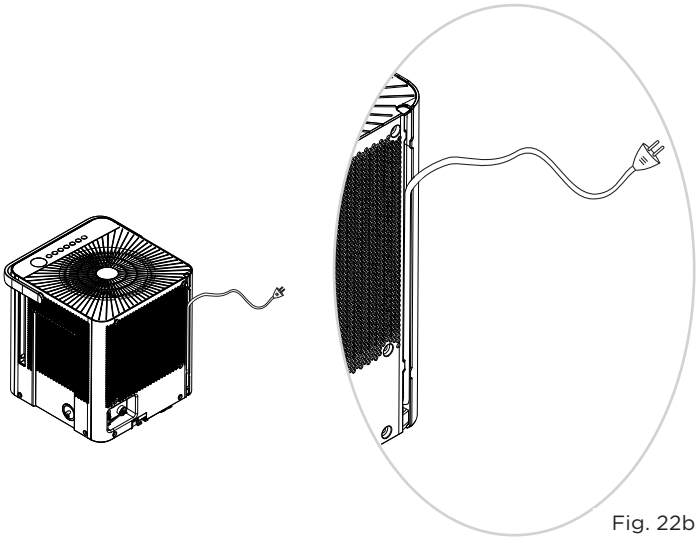

Fig. 22b

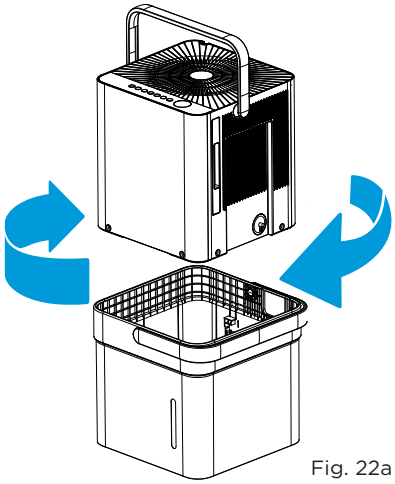

Fig. 22a

Step 5:

The dehumidifier is nested and ready to store.

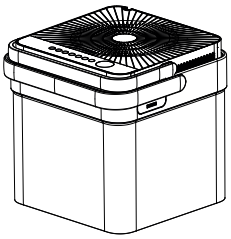

Fig. 23

⚠ CAUTION

When carrying the nested unit, be sure and use the bucket handle to ensure both the dehumidifier and bucket are safely carried.

TROUBLESHOOTING TIPS

Malfunction Diagnosis

Before calling for service, review this list. It may save you time and expense. This list includes common occurrences that are not the result of defective workmanship or materials in this appliance.

Problem	Solution
Unit does not start	Make sure the dehumidifier plug is connected firmly into the wall outlet.
	Check the house fuse/circuit breaker box.
	Dehumidifier has reached its preset level or bucket is full.
	Water bucket is not in the proper position.
Dehumidifier does not dry the air as it should	Not enough time to remove the moisture.
	Make sure there are no curtains, blinds or furniture blocking the front or back of the dehumidifier.
	The humidity control may not be set low enough.
	Check that all doors, windows and other openings are securely closed.
	Room temperature is too low, below 5°C (41°F).
	There is a water vapor source in the room.
The unit makes a loud noise when operating	Air filter may be dirty. Clean filter. Refer to Care and Cleaning section.
	The unit is tilted instead of upright as it should be.
	The floor surface is not level.
Frost appears on the coils	This is normal. The dehumidifier has Auto defrost feature.
Water on floor	Hose to connector or hose connection may be loose.
	Intended to use the bucket to collect water, but the back drain plug is removed.
ES, AS, P2, EC, Eb and E3 appear in the display	These are error codes and protection code. Check Operating Instructions.
The pump operation on light blinks at 1 Hz	Clean the pump filter.
	Check the pump hose is not blocked or leaking.
	Empty the water bucket.
When operating in bucketless mode, water collects around the bottom of the unit	Check to ensure the unit is level, and there is no debris on the surface.
	Check the drain hose connection and ensure it is properly seated in the outlet.
Unit will not connect to Wireless or App does not work.	For additional support and troubleshooting tips, visit the “Help” tab within the SmartHome app.

WARRANTY

Dehumidifier Limited Warranty

Your product is protected by this Limited Warranty:

Warranty service must be obtained from Midea Consumer Services or an authorized Midea servicer.

Warranty

- Two Year Full warranty from the date of delivery or the purchase date, whichever is later.
- The date of delivery establishes the warranty period, should service be required.

Midea, through its authorized servicers will:

- Pay all costs for reparing or replacing parts of this appliance which prove to be defective in materials or workmanship.

Consumer will be responsible for:

- Diagnostics, removal, transportation and reinstallation cost required because of service.
- Costs of service calls that are a result of items listed under NORMAL RESPONSABILITIES OF THE CONSUMER**

Midea replacement parts shall be used and will be warranted only for the original warranty.

NORMAL RESPONSABILITIES OF THE CONSUMER**

This warranty applies only to products in ordinary household use, and the consumer is responsible for the items listed below:

1. Proper use of the appliance in acordance with instructions provided with the product.
2. Routine maintenance and cleaning necessary to keep the good working condition.
3. Proper installation by an authorized service professional in accordance with instructions provided with the appliance and in accordance with all local plumbing, electrical and/or gas codes.
4. Proper connection to a grouded power supply of sufficient voltage, replacement of blown fuses, repair of loosen connections or defects in house wiring.
5. Expenses for making the appliance accessible for servicing.
6. Damages to finish after intallation.

EXCLUSIONS

This warranty does not cover the following:

1) Failure caused by damage to the unit while in your possesion (other than damage caused by defect or malfunction), by its improper installation, or by unreasonable use of the unit, including without limitation, failure to provide reasonable and necessary maintenance or to follow the written installation and Operating Instructions.
2) Damages caused by services performed by persons other than authorized Midea costumer service; or external causes such as abuse, misuse, inadequate power supply or acts of God.
3) If the unit is put to commercial, business, rental, or other use or application other than for consumer use, we make no warranties, express or implied, including but not limited to, any implied warranty of merchantability or fitness for use or purpose.
4) Products without original serial numbers or products that have serial numbers which have been altered or cannot be readily determined.

NOTE: Some states do not allow the exclusions or limitation of incidental or consequential damages. So this limitation or exclusion may not apply to you.

IF YOU NEED SERVICE

Keep your bill of sale, delivery slip, or some other appropriate payment Record.

The date on the bill establishes the warranty period, should service be required.

If service is performed, its your best interest to obtain and keep all receipts.

This written warranty gives you specific legal rights. You may also have other rights that vary from state to state.

Service under this warranty must be obtained by following these steps, in order:

1) Contact Midea Consumer Services or an authorized Midea services at 1 866 646 4332.
2) If there is a question as to where to obtain service, contact our consumer relations Departament.

Midea

make yourself at home

www.midea.com

© Midea 2025 all rights reserved

MADDM

16120100A23515