Midea

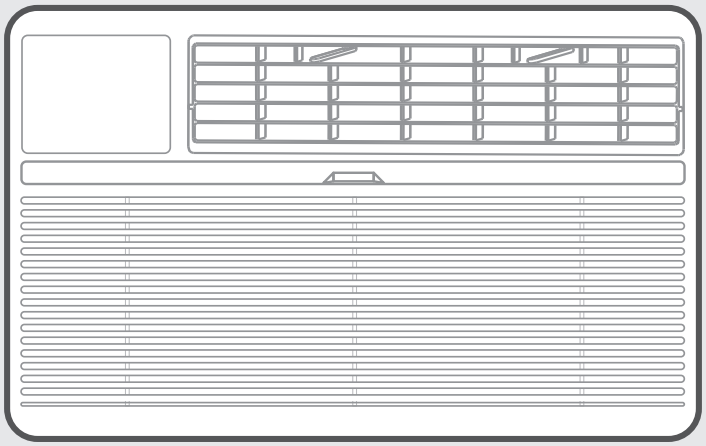

WALL/WINDOW TYPE ROOM AIR CONDITIONER

OWNER'S MANUAL

MODEL NUMBER

MAT08R1YWT MAT08H1ZWT
MAT10R1YWT MAT10R2YWT
MAT10H2ZWT MAT12R1YWT
MAT12R2YWT MAT12H2ZWT
MAT14R2ZWT MAT14H2ZWT

Warning notices: Before using this product, please read this manual carefully and keep it for future reference.
The design and specifications are subject to change without prior notice for product improvement.
Consult with your dealer or manufacturer for details.
The diagram above is just for reference. Please take the appearance of the actual product as the standard.

CONTENTS

SAFETY PRECAUTIONS 02
WHAT IS IN THE BOX. 12
BEFORE YOU GET START. 13
INSTALL YOUR PRODUCT. 16
GET TO KNOW YOUR AC. 28
GET TO KNOW THE FEATURES. 29
CLEANING & MAINTENANCE 41
TROUBLESHOOTING 42

SAFETY PRECAUTIONS

It is really important you read Safety Precautions Before Operation and Installation Incorrect installation due to ignoring instructions can cause serious damage or injury. The seriousness of potential damage or injuries is classified as either a WARNING or CAUTION.

Explanation of Symbols

WARNING

This symbol indicates the possibility of personal injury or loss of life.

CAUTION

This symbol indicates the possibility of property damage or serious consequences.

NEVER DO THIS

This signal indicates the prompt operation is prohibited, if not avoided, may result in Product damaged or injury.

ALWAYS DO THIS

This signal means that the operation can be performed.

WARNING

- Plug in power plug properly. Otherwise, it may cause electric shock or fire due to excess heat generation. Do not operate or stop the unit by inserting or pulling out the power plug.It may cause electric shock or fire due to heat generation. Do not damage or use an unspecified power cord.It may cause electric shock or fire. If the power cord is damaged, it must be replaced by the manufacturer or an authorised service centre or a similarly qualified person in order to avoid a hazard.
- Always install circuit breaker and a dedicated power circuit. Incorrect installation may cause fire and electric shock. Do not operate with wet hands or in damp environment. It may cause electric shock. Do not direct airflow at room occupants only. This could damage your health.
- Always ensure effective grounding.Incorrect grounding may cause electric shock. Do not allow water to run into electric parts.It may cause failure of machine of electric shock. Do not modify power cord length or share the outlet with other appliances. It may cause electric shock or fire due to heat generation.
- Unplug the unit if strange sounds, smell, or smoke comes from it. It may cause fire and electric shock. Do not use the socket if it is loose or damaged. It may cause fire and electric shock. Do not open the unit during operation. It may cause electric shock.

- Keep firearms away. It may cause fire. Do not use the power cord close to heating appliances.It may cause fire and electric shock. Do not use the power cord near flammable gas or combustibles, such as gasoline, benzene, thinner, etc. It may cause an explosion or fire.
- Ventilate room before operating air conditioner if there is a gas leakage from another appliance. It may cause explosion, fire and, burns. Do not disassemble or modify unit. It may cause failure and electric shock.

⚠ CAUTION

- When the air filter is to be removed, do not touch the metal parts of the unit. It may cause an injury. Ventilate the room well when used together with a stove, etc. An oxygen shortage may occur.
- Do not use strong detergent such as wax or thinner but use a soft cloth. Appearance may be deteriorated due to change of product color or scratching of its surface. Do not clean the air conditioner with water. Water may enter the unit and degrade the insulation. It may cause an electric shock. Do not use for special purposes. Do not use this air conditioner to preserve precision devices, food, pets, plants, and art objects.It may cause deterioration of quality, etc.
- Stop operation and close the window in storm or hurricane. Operation with windows opened may cause wetting of indoor and soaking of household furniture. When the unit is to be cleaned, switch off, and turn off the circuit breaker.
- Do not clean unit when power is on as it may cause fire and electric shock, it may cause an injury.
- Always insert the filters securely. It can be caused failure if operated without filters. Please clean filter once every two weeks.
- Hold the plug by the head of the power plug when taking it out. It may cause electric shock and damage. Turn off the main power switch when not using the unit for a long time. It may cause failure of product or fire.
- Do not place obstacles around air-inlets or inside of air-outlet. It may cause failure of appliance or accident. Do not place heavy object on the power cord and ensure that the cord is not compressed. There is danger of fire or electric shock. Don’t drink water drained from air conditioner. It contains contaminants and could make you sick.
- Use caution when unpacking and installing. Sharp edges could cause injury.
- If water enters the unit, turn the unit off at the power outlet and switch off the circuit breaker. Isolate supply by taking the power-plug out and contact a qualified service technician.
- This appliance is not intended for use by persons(including children) with reduced physical ,sensory or mental capabilities or lack of experience and knowledge, unless they have been given supervision or instruction concerning use of the appliance by a person responsible for their safety.
- Children should be supervised to ensure that they do not play with the appliance.
- If the supply cord is damaged, it must be replaced by the manufacturer, its service agent or similarly qualified persons in order to avoid a hazard.
- The appliance shall be installed in accordance with national wiring regulations.

- Installation must be performed in accordance with the requirement of NEC and CEC by authorized personnel only.
- Do not operate your air conditioner in a wet room such as a bathroom or laundry room.
- The appliance with electric heater shall have at least 1 meter space to the combustible materials.
- Contact the authorised service technician for repair or maintenance of this unit.
- Contact the authorised installer for installation of this unit.

NOTE

This air conditioner is designed to be operated under the following conditions:

Cooling operation	Outdoor temp:	64-109°F/18-43°C(64-125°F/18-52°C for special tropical models)
	Indoor temp:	62-90°F/17-32°C
Heating operation	Outdoor temp:	23-76°F/5-24°C
	Indoor temp:	32-80°F/0-27°C

Note: Performance may be reduced outside of these operating temperatures.

Operation of Current Device

The power supply cord contains a current device that senses damage to the power cord. To test your power supply cord do the following:

- Plug in the Air Conditioner.
- The power supply cord will have TWO buttons on the plug head. Press the TEST button, you will notice a click as the
- RESET button pops out.
- Press the RESET button again, you will notice a click as the button engages. The power supply cord is now supplying electricity to the unit. (On some products this is also indicated by a light on the plug head).

NOTE

- The power supply cord with this air conditioner contains a current detection device designed to reduce the risk of fire.
  In the event that the power cord is damaged, it cannot be repaired – it must be replaced with a cord from the product manufacturer.
- Do not use this device to turn the unit on or off.
- Always make sure the RESET button is pushed in for correct operation.
- The power supply cord must be replaced if it fails to reset when either the TEST button is pushed or if it cannot be reset. A new one can be obtained from the product manufacturer.

Grounding type wall receptacle

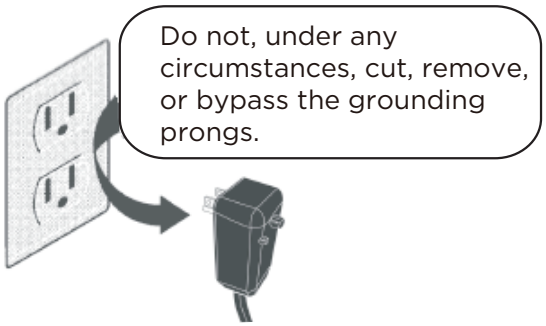

Power supply cord with 3-prong grounding plug and current detection device.

⚠ WARNING

Electrical Information

The complete electical rating of your new room air conditioner is stated on the serial plate. Refer to the rating when checking the electrical requirements.

- Be sure the air conditioner is properly grounded. To minimize shock and fire hazards, proper grounding is important. The power cord is equipped with a three-prong grounding plug for protection against shock hazards.
- Your air conditioner must be used in a properly grounded wall receptacle. If the wall receptacle you intend to use is not adequately grounded or protected by a time delay fuse or circuit breaker, have a qualified electrician install the proper receptacle. Ensure the receptacle is accessible after the unit installation.
- Do not run air conditioner without side protective cover in place. This could result in mechanical damage within the air conditioner.
- Do not use an extension cord or an adapter plug.

Avoid fire hazard or electric shock. Do not use an extension cord or an adapter plug. Do not remove any prongs from the power cord.

For Your Safety

Do not store or use gasoline or other flammable vapors and iquids in the vicinity of this or any other appliance.

Prevent Accidents

To reduce the risk of fire, electrical shock, or injury to persons when using your air conditioner, follow basic precautions, including the following:

- Be sure the electrical service is adequate for the model you have chosen. This information can be found on the serial plate, which is located on the side of the the cabinet and behind the grille.
- If the air conditioner is to be installed in a window, you will probably want to clean both sides of the glass first. If the window is a triple-trackty pew it has creen panel included, remove the screen completely before installation.
- Be sure the air conditioner has been securely and correctly installed according to the installation instructions in this manual. Save this manual for possible future use in removing or installing this unit. When handling the air conditioner, be careful to avoid cuts from sharp metal fins on front and rear coils.

Electronic Work

WARNING:
BEFORE PERFORMING ANY ELECTRICAL OR WIRING WORK, TURN OFF THE MAIN POWER TO THE SYSTEM.

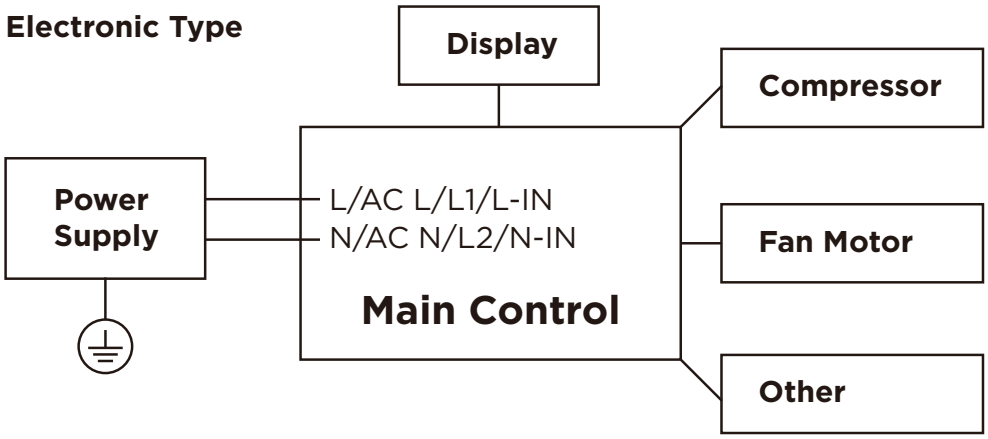

NOTICE:

Please strictly follow the wiring label attached to the machine for all wiring connections. The wiring diagram may vary for different unit. Please refer to the wiring diagram on the machine you have purchased. The above wiring diagram is a simplified version for preliminary illustration purposes only.

⚠ WARNING for Using R32 Refrigerant

- Do not use means to accelerate the defrosting process or to clean, other than those recommended by the manufacturer.
- The appliance shall be stored in a room without continuously operating ignition sources (for example: open flames, an operating gas appliance or an operating electric heater).
- Do not pierce or burn.
- Be aware that the refrigerants may not contain an odour.
- Appliance should be installed, operated and stored in a room with a floor area according to the amount of refrigerant to be charged. For specific information on the type of gas and the amount, please refer to the relevant label on the unit itself. When there are differences between the lable and the manual on the Min. room area description, the description on label shall prevail.
- Appliance shall be installed, operated and stored in a room with a floor area larger than 4 m^2.
  Appliance shall not be installed in an unvertilated space, if that space is smaller than 4 m^2.
- No open fire or device like switch which may generate spark/arcing shall be around appliance to avoid causing ignition of the flammable refrigerant used.
  Please follow the instructions carefully when storing or maintaining the appliance to prevent mechanical damage from occurring.

CAUTION:
Risk of fire
flammable materials

Explanation of symbols displayed on the unit

	CAUTION	This symbol shows that the operation manual should be read carefully.
	CAUTION	This symbol shows that a service personnel should be handling this equipment with reference to the installation manual.
	CAUTION	This symbol shows that information is available such as the operating manual or installation manual.

⚠ WARNING for Using R32 Refrigerant

- Servicing shall only be performed as recommended by the equipment manufacturer. Maintenance and repair requiring the assistance of other skilled personnel shall be carried out under the supervision of the person competent in the use of flammable refrigerants.
- DO NOT modify the length of the power cord or use an extension cord to power the unit.
- DO NOT share a single outlet with other electrical appliances. Improper power supply can cause fire or electrical shock.
- Please follow the instruction carefully to handle, install, clear, service the appliance to avoid any damage or hazard.
- When maintaining or disposing the appliance, the refrigerant shall be recovered properly, shall not discharge to air directly.
- Compliance with national gas regulations shall be observed.
- Keep ventilation openings clear of obstruction.
- The appliance shall be stored so as to prevent mechanical damage from occurring.
- A warning that the appliance shall be stored in a well-ventilated area where the room size corresponds to the room area as specified for operation.
- Any person who is involved with working on or breaking into a refrigerant circuit should hold a current valid certificate from an industry-accredited assessment authority, which authorises their competence to handle refrigerants safely in accordance with an industry recognised assessment specification. All training shall follow the ANNEX HH requirements of UL 60335-2-40 4th Edition.
  Examples for such working procedures are:
  • breaking into the refrigerating circuit;
  • opening of sealed components;
  • opening of ventilated enclosures.

1. Transport of equipment containing flammable refrigerants
See transport regulations.

2. Marking of equipment using signs
See local regulations.

3. Disposal of equipment using flammable refrigerants
See national regulations.

4. Storage of equipment/appliances
The storage of the appliance should be in accordance with the applicable regulations or instructions, whichever is more stringent.

5. Storage of packed (unsold) equipment
Storage package protection should be constructed such that mechanical damage to the equipment inside the package will not cause a leak of the refrigerant charge. The maximum number of pieces of equipment permitted to be stored together will be determined by local regulations.

6. Information on servicing
1) Checks to the area
Prior to beginning work on systems containing flammable refrigerants, safety checks are necessary to ensure that the risk of ignition is minimised. For repair to the refrigerating system, the following precautions shall be complied with prior to conducting work on the system.
2) Work procedure
Work shall be undertaken under a controlled procedure so as to minimise the risk of a flammable gas or vapour being present while the work is being performed.
3) General work area
All maintenance staff and others working in the local area shall be instructed on the nature of work being carried out. Work in confined spaces shall be avoided. The area around the workspace shall be sectioned off. Ensure that the conditions within the area have been made safe by control of flammable material.
4) Checking for presence of refrigerant
The area shall be checked with an appropriate refrigerating detector prior to and during work, to ensure the technician is aware of potentially flammable atmospheres. Ensure that the leak detection equipment being used is suitable for use with flammable refrigerants, i.e. non-sparking, adequately sealed or intrinsically safe.
5) Presence of fire extinguisher
If any hot work is to be conducted on the refrigeration equipment or any associated parts, appropriate fire extinguishing equipment shall be available to hand. Have a dry powder or CO_2 fire extinguisher adjacent to the charging area.
6) No ignition sources
No person carrying out work in relation to a refrigerating system which involves exposing any pipe work that contains or has contained flammable refrigerant shall use any sources of ignition in such a manner that it may lead to the risk of fire or explosion. All possible ignition sources, including cigarette smoking, should be kept sufficiently far away from the site of installation, repairing, removing and disposal, during which flammable refrigerant can possibly be released to the surrounding space. Prior to work taking place, the area around the equipment is to be surveyed to make sure that there are no flammable hazards or ignition risks. No Smoking signs shall be displayed.

7)ventilated area
Ensure that the area is in the open or that it is adequately ventilated before breaking into the system or conducting any hot work. A degree of ventilation shall continue during the period that the work is carried out. The ventilation should safely disperse any released refrigerant and preferably expel it externally into the atmosphere.
8)Checks to the refrigerating equipment
Where electrical components are being changed, they shall be fit for the purpose and to the correct specifications. At all times the manufacturer's maintenance and service guidelines shall be followed. If in doubt consult the manufacturer's technical department for assistance. The following checks shall be applied to installations using flammable refrigerants: the actual refrigerant charge is in accordance with the room size within which the refrigerant containing parts are installed; the ventilation machinery and outlets are operating adequately and are not obstructed; if an indirect refrigerating circuit is being used, the secondary circuit shall be checked for the presence of refrigerant; marking to the equipment continues to be visible and legible.
Markings and signs that are illegible shall be corrected; and refrigerating pipe or components are installed in a position where they are unlikely to be exposed to any substance which may corrode refrigerant containing components, unless the components are constructed of materials which are inherently resistant to being corroded or are suitably protected against being so corroded.
9)Checks to electrical devices
Repair and maintenance to electrical components shall include initial safety checks and component inspection procedures. If a fault exists that could compromise safety, then no electrical supply shall be connected to the circuit until it is satisfactorily dealt with. If the fault cannot be corrected immediately but it is necessary to continue operation, an adequate temporary solution shall be used.
This shall be reported to the owner of the equipment so all parties are advised. Initial safety checks shall include: That capacitors are discharged: this shall be done in a safe manner to avoid possibility of sparking; that there no live electrical components and wiring are exposed while charging, recovering or purging the system; that there is continuity of earth bonding.

7. Sealed electrical components shall be replaced.

8. Intrinsically safe components must be replaced.

9. Cabling

Check that cabling will not be subject to wear, corrosion, excessive pressure, vibration, sharp edges or any other adverse environmental effects. The check shall also take into account the effects of aging or continual vibration from sources such as compressors or fans.

10. Detection of flammable refrigerants

Under no circumstances shall potential sources of ignition be used in the searching for or detection of refrigerant leaks. A halide torch (or any other detector using a naked flame) shall not be used.
The following leak detection methods are deemed acceptable for systems containing flammable refrigerants. Electronic leak detectors shall be used to detect flammable refrigerants, but the sensitivity may not be adequate, or may need re-calibration. (Detection equipment shall be calibrated in a refrigerant-free area.) Ensure that the detector is not a potential source of ignition and is suitable for the refrigerant used. Leak detection equipment shall be set at a percentage of the LFL of the refrigerant and shall be calibrated to the refrigerant employed

and the appropriate percentage of gas (25 % maximum) is confirmed. Leak detection fluids are suitable for use with most refrigerants but the use of detergents containing chlorine shall be avoided as the chlorine may react with the refrigerant and corrode the copper pipe-work. If a leak is suspected, all naked flames shall be removed/ extinguished. If a leakage of refrigerant is found which requires brazing, all of the refrigerant shall be recovered from the system, or isolated (by means of shut off valves) in a part of the system remote from the leak. Removal of refrigerant shall be according to Removal and evacuation.

11. Removal and evacuation

When breaking into the refrigerant circuit to make repairs—or for any other purpose - conventional procedures shall be used. However, for flammable refrigerants it is important that best practice be followed, since flammability is a consideration. The following procedure shall be adhered to:

-Safely remove refrigerant following local and national regulations;
-Evacuate;
-Purge the circuit with inert gas (optional for A2L);
-Evacuate (optional for A2L);
-continuously flush or purge with inert gas when using flame to open circuit; and
-open the circuit.

The refrigerant charge shall be recovered into the correct recovery cylinders if venting is not allowed by local and national codes. For appliances containing flammable refrigerants, the system shall be purged with oxygen-free nitrogen to render the appliance safe for flammable refrigerants. This process might need to be repeated several times.compressed air or oxygen shall not be used for purging refrigerant systems.

For appliances containing flammable refrigerants, refrigerants purging shall be achieved by breaking the vacuum in the system with oxygen-free nitrogen and continuing to fill until the working pressure is achieved, then venting to atmosphere, and finally pulling down to a vacuum (optional for A2L).

This process shall be repeated until no refrigerant is within the system (optional for A2L). When the final oxygen-free nitrogen charge is used. the system shall be vented down to atmospheric pressure to enable work to take place. The outlet for the vacuum pump shall not be close to any potential ignition sources, and ventilation shall be available.

12. Charging procedures

In addition to conventional charging procedures, the following requirements shall be followed.

Ensure that contamination of different refrigerants does not occur when using charging equipment.

Hoses or lines shall be as short as possible to minimise the amount of refrigerant contained in them.

Cylinders shall be kept in an appropriate position according to the instructions.

Ensure that the refrigeration system is earthed prior to charging the system with refrigerant. Label the system when charging is complete (if not already). Extreme care shall be taken not to overfill the refrigeration system. Prior to recharging the system it shall be pressure tested with OFN. The system shall be leak tested on completion of charging but prior to commissioning. A follow up leak test shall be carried out prior to leaving the site.

13. Decommissioning

Before carrying out this procedure, it is essential that the technician is completely familiar with the equipment and all its detail. It is recommended good practice that all refrigerants are recovered safely.

Prior to the task being carried out, an oil and refrigerant sample shall be taken in case analysis is required prior to re-use of reclaimed refrigerant. It is essential that electrical power is available before the task is commenced.

a) Become familiar with the equipment and its operation.
b) Isolate system electrically.
c) Before attempting the procedure ensure that: Mechanical handling equipment is available, if required, for handling refrigerant cylinders;all personal protective equipment is available and being used correctly; the recovery process is supervised at all times by a competent person; recovery equipment and cylinders conform to the appropriate standards.
d) Pump down refrigerant system, if possible.
e) If a vacuum is not possible, make a manifold so that refrigerant can be removed from various parts of the system.
f) Make sure that cylinder is situated on the scales before recovery takes place.
g) Start the recovery machine and operate in accordance with manufacturer's instructions.
h) Do not overfill cylinders. (No more than 80 % volume liquid charge).
i) Do not exceed the maximum working pressure of the cylinder, even temporarily.
j) When the cylinders have been filled correctly and the process completed, make sure that the cylinders and the equipment are removed from site promptly and all isolation valves on the equipment are closed off.
k) Recovered refrigerant shall not be charged into another refrigeration system unless it has been cleaned and checked.

14. Labelling

Equipment shall be labelled stating that it has been de-commissioned and emptied of refrigerant. The label shall be dated and signed. Ensure that there are labels on the equipment stating the equipment contains flammable refrigerant.

15.Recovery

When removing refrigerant from a system, either for servicing or decommissioning, it is recommended good practice that all refrigerants are removed safely. When transferring refrigerant into cylinders, ensure that only appropriate refrigerant recovery cylinders are employed. Ensure that the correct number of cylinders for holding the total system charge is available. All cylinders to be used are designated for the recovered refrigerant and labelled for that refrigerant (i.e. special cylinders for the recovery of refrigerant). Cylinders shall be complete with pressure relief valve and associated shut-off valves in good working order. Empty recovery cylinders are evacuated and, if possible, cooled before recovery occurs. The recovery equipment shall be in good working order with a set of instructions concerning the equipment that is at hand and shall be suitable for the recovery of the flammable refrigerant. If in doubt, the manufacturer should be consulted. In addition, a set of calibrated weighing scales shall be available and in good working order. Hoses shall be complete with leak-free disconnect couplings and in good condition.

The recovered refrigerant shall be processed according to local legislation in the correct recovery cylinder, and the relevant waste transfer note arranged. Do not mix refrigerants in recovery units and especially not in cylinders. If compressors or compressor oils are to be removed, ensure that they have been evacuated to an acceptable level to make certain that flammable refrigerant does not remain within the lubricant. The compressor body shall not be heated by an open flame or other ignition sources to accelerate this process. When oil is drained from a system, it shall be carried out safely.

WHAT IS IN THE BOX.

Package content

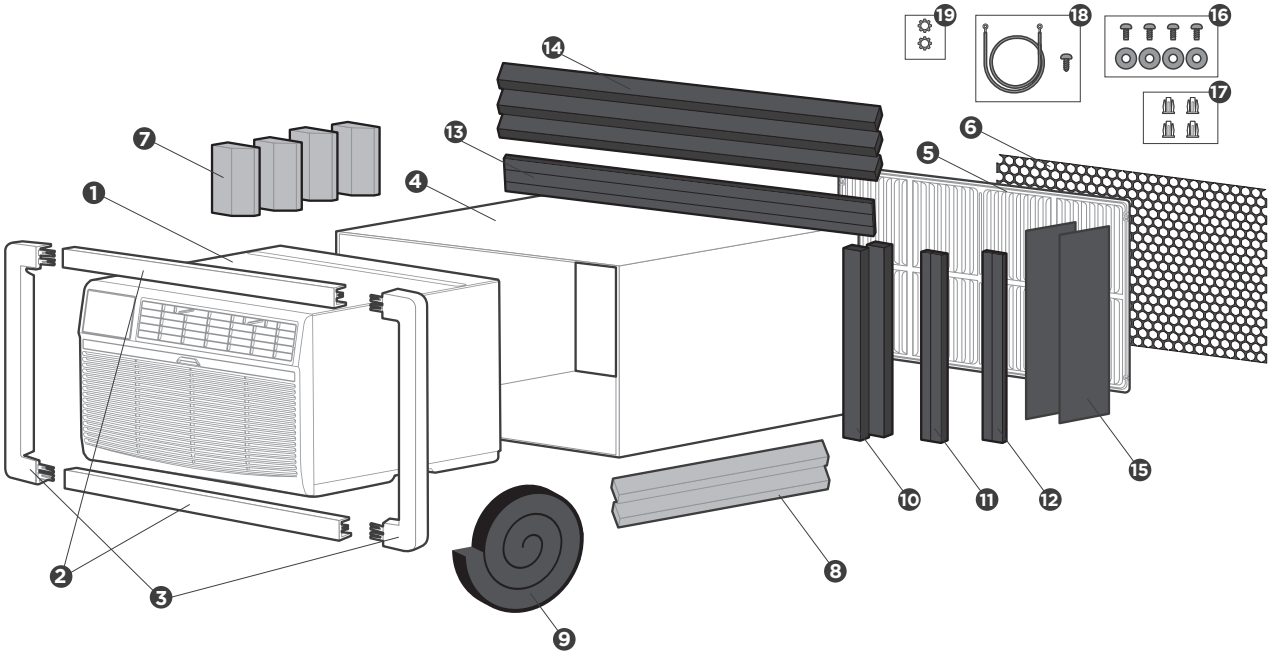

❶ Air Conditioner Unit
❷ Trim Frame (top & bottom legs)*2
❸ Trim Frame (side legs)*2
❹ Wall Sleeve (purchase separately)
❺ Aluminum Grille
❻ Plastic Grille (1/8″x4-1/2″x14-1/2″)
❼ Centering/Support Blocks(Blue)*4 (4-1/2″x3-1/2″x1-1/2″)
❽ Tapered Spacer Block(Blue)*2 (7/8″x1-1/8″x17″)
❾ Stuffer-seal*1 (1″x1-1/2″x84″)
❿ Seal*2 (1″x1-1/2″x14″)
⓫ Seal*2 (1″x3/4″x14″)
⓬ Seal*2 (1″x3/8″x14″)
⓭ Seal*2 (1″x3/8″x25″)
⓮ Seal*3 (1″x1-1/2″x25″)
⓯ Plastic Divider*2 (1/8″x4-1/2″x14-1/2″)
⓰ Screw*4 and Screw Washer*4
⓱ Nuts(plastic)*4
⓲ Ground Wire and Grounding Screw
⓳ Toothed Washer for Grounding Screw

Prepare the following tools

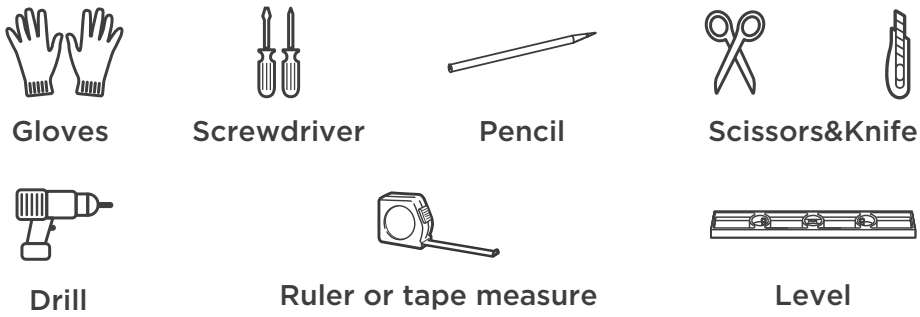

*Not Included

⚠ CAUTION

- Do not, under any circumstances, cut or remove the third (ground) prong from the power cord.
- Do not change the plug on the power cord of the air conditioner.
- Aluminum house wiring may present special problems- consult a qualified electircian.
- When handling unit, be careful to avoid cuts from sharp metal edges and aluminum fins on front and rear coils.

BEFORE YOU GET START.

Preparations before installation

The installation must be carried out in strict accordance with the instructions in this manual.

We recommend doing this with a helper.

Installing your AC should take about 60 minutes.

We're here if you need us, please contact your local distributor for assistance.

NOTE

Save Carton and these Installation Instructions for future reference. The carton is the best way to store unit during winter, or when not in use.

Confirm your installation location requirements and Wall Sleeve Dimensions.

- The Air Conditioner dimensions are: 24″ wide, 1 4″ high, and 18″ deep (without front panel). Install Air Conditioner according to these installation instructions to achieve the best performance.
- Confirm the size of the wall sleeve according to your hole in the wall, identify the wall-sleeve brand for your installation, from the chart below.

Brand	Width	Height	Depth
White-Westinghouse	25-1/2″	15-1/4″	16″,17-1/2″ or 22″
Frigidaire			
Carrier(52F Series)			
General Electric/ Hotpoint	26″	15-5/8″	15-7/8″
Whirlpool	25-7/8″	16-1/2″	17-1/8″ or 23″
Fedders/Emerson	27″	16-3/4″	16-3/4″ or 19-3/4″
Sears/Kenmore	25-3/4″	16-7/8″	18-5/8″
Carrier(51S Series)			
Emerson/Fedders	26-3/4″	15-3/4″	15″
Friedrich	27″	16-3/4″	16-3/4″

According to different wall cover depth, we have divided the installation into 9 categories. Please note that the wall cover of the same brand may also have different depths. Please install according to the depth.

Type	Brand	Depth
#1	Emerson	15″
#2	Fedders	19-3/4″
#3	Fedders/ Friedrich	16-3/4″
#4	General Electric/ Hotpoint	16-7/8″
#5	Sears/ Carrier(51S Series)	18-5/8″
#6	Whirlpool	17-1/8″
#7	Whirlpool	23″
#8	White-Westinghouse/ Frigidaire/ Carrier(52F Series)	16/17-1/2″
#9	White-Westinghouse/ Frigidaire	22″

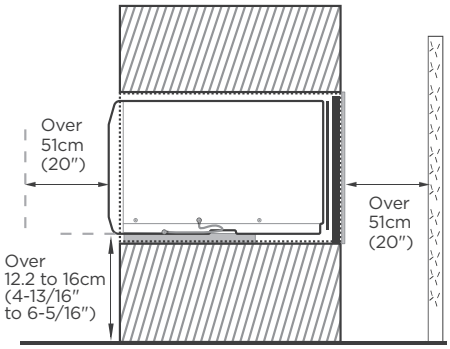

Side View

To make the appliance work better, please do not place a barrier in the air outlet, and select the installation location of the product according to the requirements in the following figure.

Complete the installation of Wall Sleeve.

Preparations before unit installation

Install the wall sleeve and make grounding connection

- Remove old Air Conditioner from wall sleeve and prepare wall sleeve(if any). Clean interior (do not disturb seals).
- Under the front of the wall cover, there are two 1/8″ holes for ground operation. Use the Ground Wire and Ground Screw(No. 18), and Toothed Washerin(No. 19) the fitting bag for ground installation.

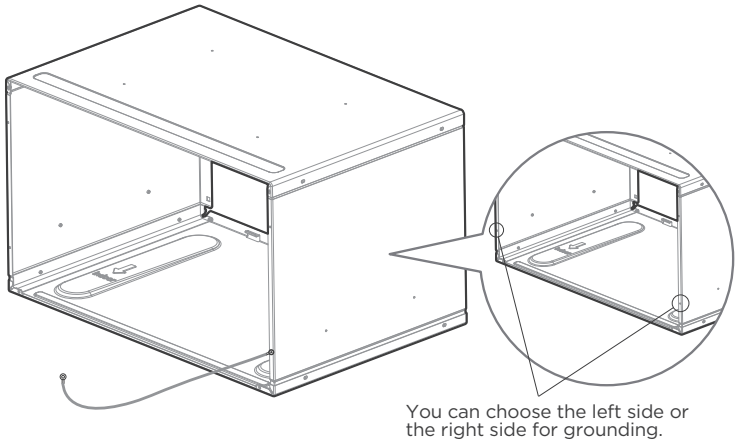

Normal grounding operation

- If there is no ground wire installation hole, please drill a 1/8 clearance hole for grounding screw through left side of wall sleeve, in a clear area about 3″ maximum back from front edge of sleeve, using grounding screw and toothed washer. Pull loose end of ground wire out front of sleeve, and temporarily bend it down and around lower edge of sleeve.
  This ground wire will later be attached to frame of air conditioner once it is installed.

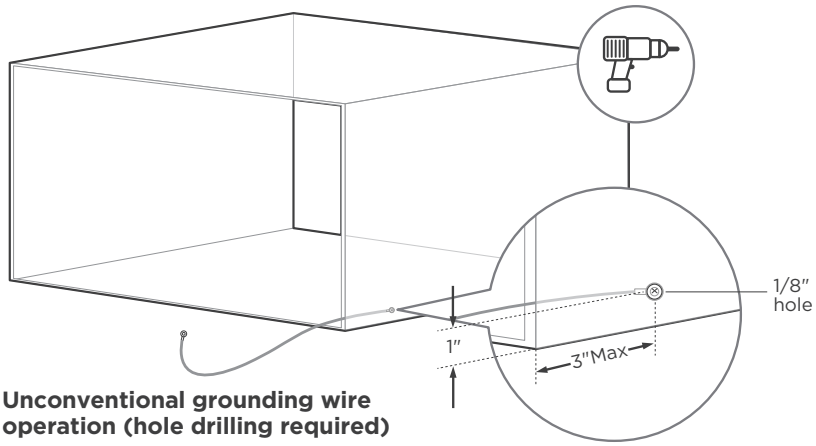

Unconventional grounding wire operation (hole drilling required)

- Wall sleeve must be securely fastened in wall before installing Air Conditioner. Drive more nails or screws through sleeve, into wall, if needed(Repair paint if needed).

CAUTION:

- All wall sleeves used to mount the new Air Conditioner must be in sound structural condition and have a rear grille that securely attaches to sleeve, or rear flange that serves as a stop for the Air Conditioner.
- When installation is complete, replacement unit MUST have a rearward slope as shown.
- Do not use any screws other than those specified here.

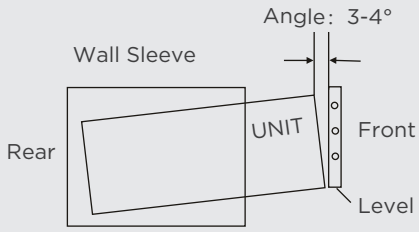

Installation of Aluminum Grille.

Installation of new grille provided with unit

NOTE

We have a new design for the rear grille (two rear air intakes) to improve the performance of the product. Please be sure to use the aluminum grille we provide for installation to achieve the best performance of the product.
Most decorative exterior grilles may be left in place as long as the proper interior air direction grille is installed.

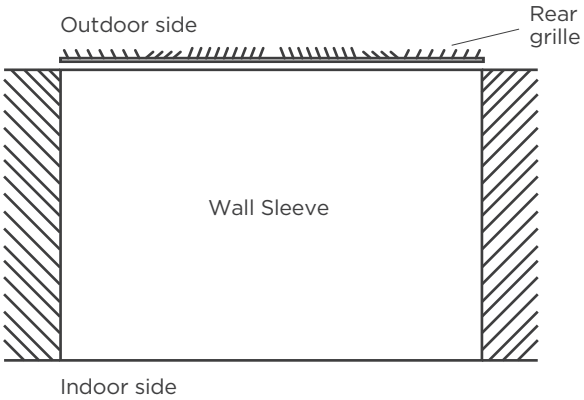

Top View

1

Confirmation of installation position.

- Remove the existing grille.
- Place the grille included with the new air conditioner towards the rear of the sleeve.

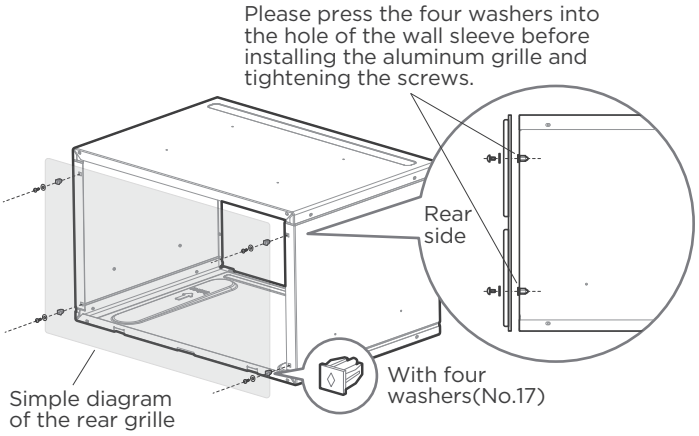

2

Install Aluminum Grille.

(with Normal Wall Sleeve)

- ttached the new grille with self-threading screws and washers.

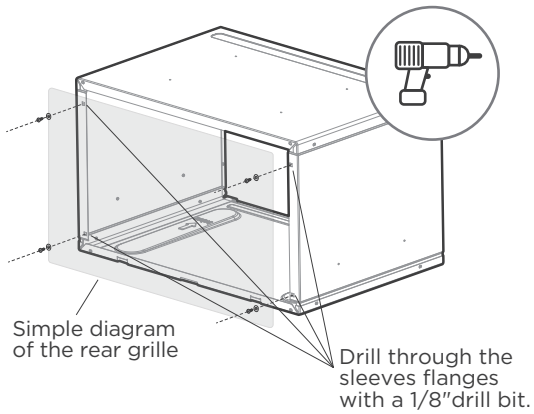

3

Install Aluminum Grille.

(with Unconventional Wall Sleeve)

- Mark through the hole positions.
- Drill through the sleeves flanges with a 1/8" drill bit.
- Attached the new grille with self-threading screws and washers.

INSTALL YOUR PRODUCT.

Installation overview

#9 White Westinghouse or Frigidaire for example

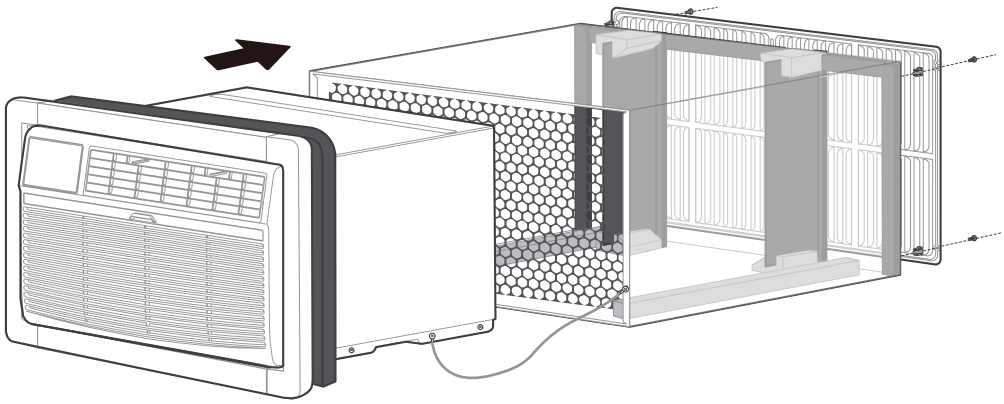

NOTE

Illustrations in this manual are for explanatory purposes. The actual shape of your indoor unit may be slightly different. The actual shape shall prevail.

IMPORTANT

Save these instructions for local inspectors use. Observe all governing codes and ordianaces. Proper installation is the responsibility of the installer. Product failure due to improper installation is not covered under the Warranty.

Nine installation methods we will provide, please choose one of the corresponding installation method (follow the instructions on page 7 to determine the type) to finish the installation.

If you have difficulty with mounting the grill to the sleeve, follow the instructions for direct mounting on Page 20.

#1 Emerson(15″ Deep)

installation guide

NOTE

Complete the first installation step according to the wall cover installation guide (page 8) and aluminum grid installation guide (page 9) .

Guide to installation before embedding the product into the wall

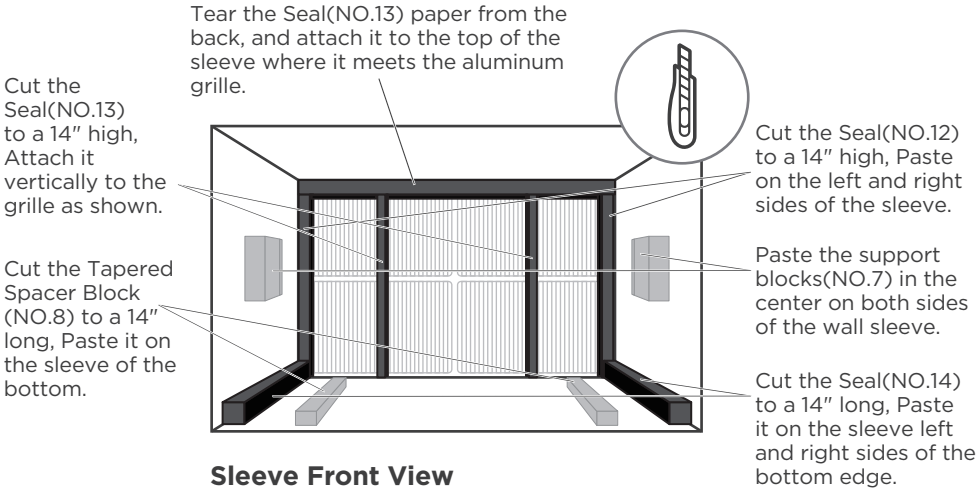

Sleeve Front View

1

Paste the fixed Seal according to the above figure and instructions.

The Seals and blocks shown above are all backed with glue.
You need to tear the paper to paste and fix it When installing.
Please be careful when you cutting.

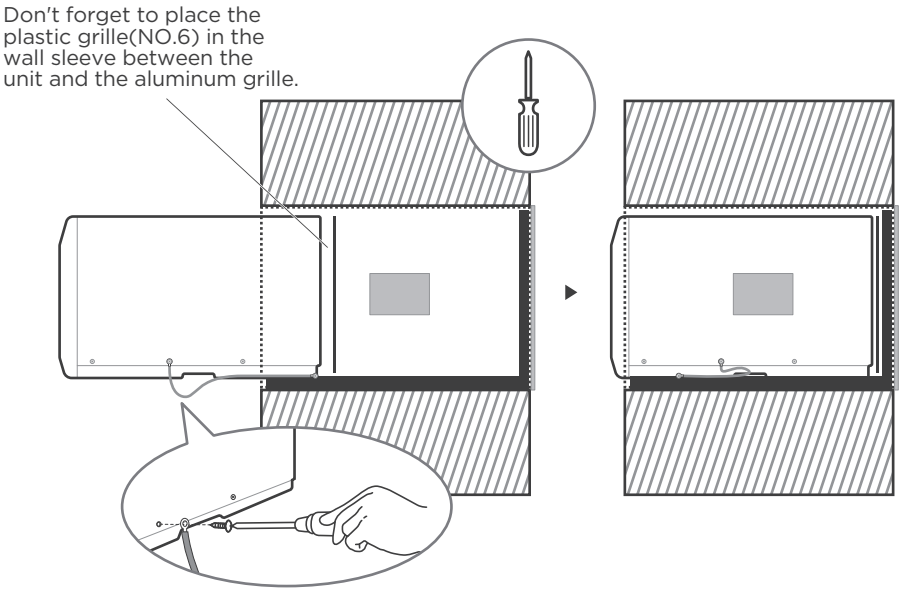

2

Complete grounding connection and product embedded wall sleeve.

Take out the unconnected end of the ground wire in the wall sleeve, and then embed the unit into the wall sleeve, as shown and then hold on. Use a screwdriver to unscrew the second screw below the unit and tighten the ground wire connection(Make sure that the toothed washer is against the cabinet).

Slide the unit completely to the rear to ensure a good seal, making sure the ground wire does not become tangled.

#2 Fedders(19-3/4″ Deep)

installation guide

NOTE

Complete the first installation step according to the wall cover installation guide (page 8) and aluminum grid installation guide (page 9) .

Guide to installation before embedding the product into the wall

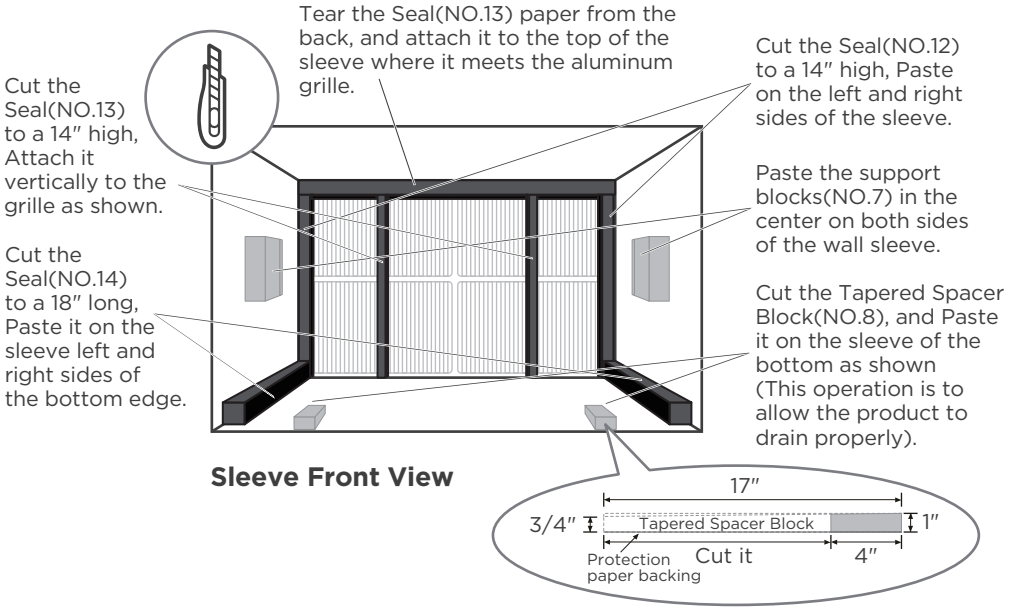

1

Paste the fixed Seal according to the above figure and instructions.

The Seals and blocks shown above are all backed with glue.

You need to tear the paper to paste and fix it When installing.

Please be careful when you cutting.

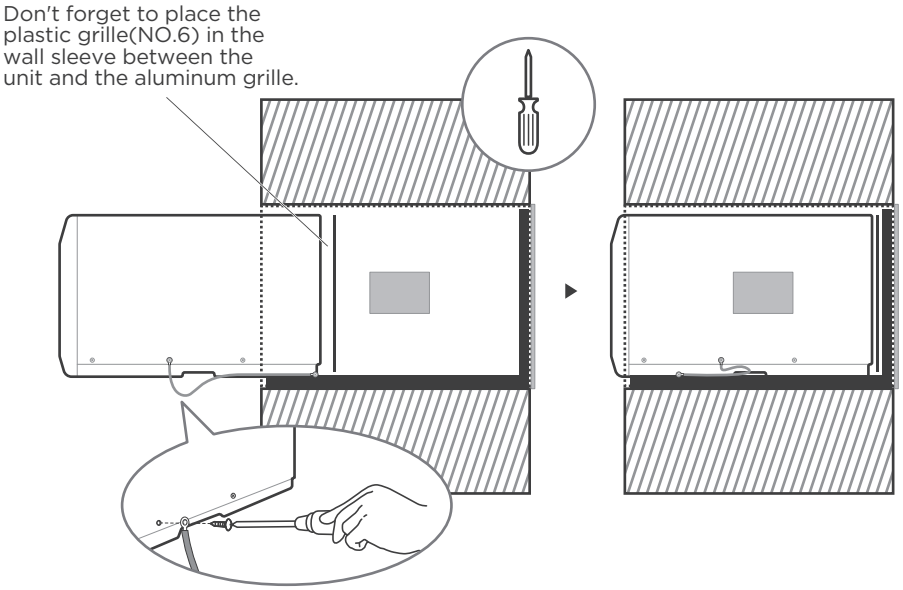

2

Complete grounding connection and product embedded wall sleeve.

Take out the unconnected end of the ground wire in the wall sleeve, and then embed the unit into the wall sleeve, as shown and then hold on. Use a screwdriver to unscrew the second screw below the unit and tighten the ground wire connection(Make sure that the toothed washer is against the cabinet).

Slide the unit completely to the rear to ensure a good seal, making sure the ground wire does not become tangled.

#3 Fedders or Friedrich(16-3/4″ Deep)

installation guide

NOTE

Complete the first installation step according to the wall cover installation guide (page 8) and aluminum grid installation guide (page 9) .

Guide to installation before embedding the product into the wall

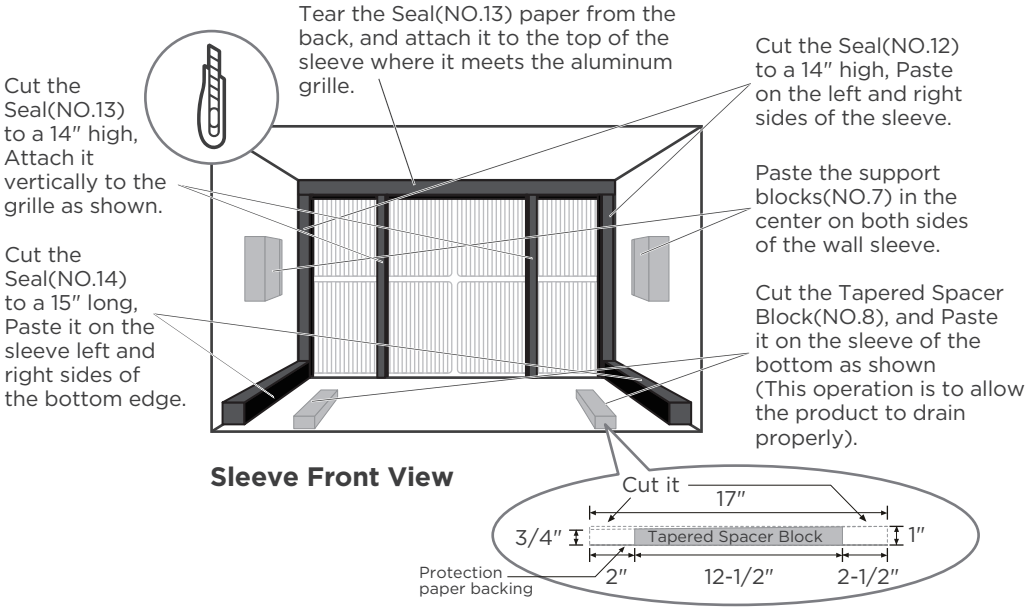

1

Paste the fixed Seal according to the above figure and instructions.

The Seals and blocks shown above are all backed with glue.

You need to tear the paper to paste and fix it When installing.

Please be careful when you cutting.

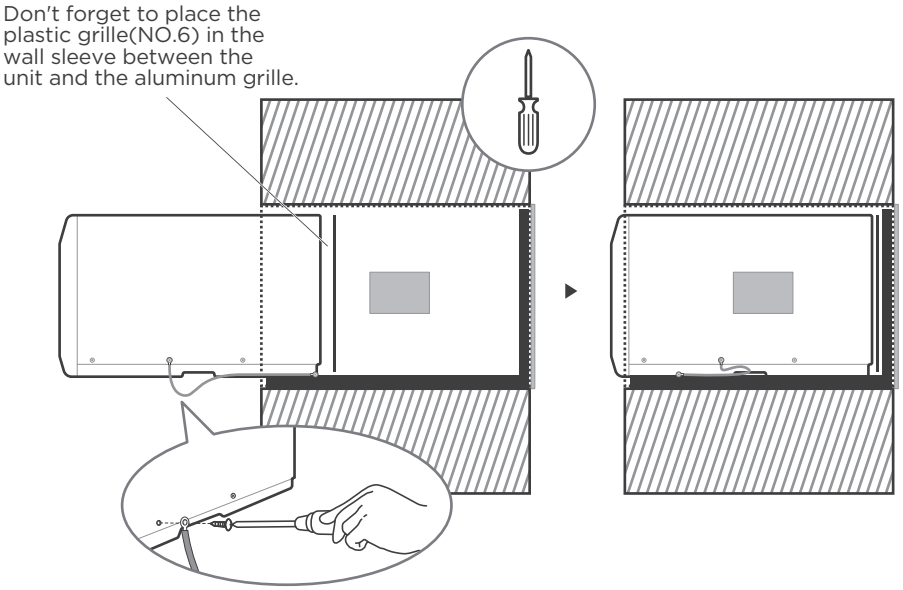

2

Complete grounding connection and product embedded wall sleeve.

Take out the unconnected end of the ground wire in the wall sleeve, and then embed the unit into the wall sleeve, as shown and then hold on. Use a screwdriver to unscrew the second screw below the unit and tighten the ground wire connection(Make sure that the toothed washer is against the cabinet).

Slide the unit completely to the rear to ensure a good seal, making sure the ground wire does not become tangled.

#4 General Electra/Hotpoint(16-7/8″ Deep)

installation guide

NOTE

Complete the first installation step according to the wall cover installation guide (page 8) and aluminum grid installation guide (page 9) .

Guide to installation before embedding the product into the wall

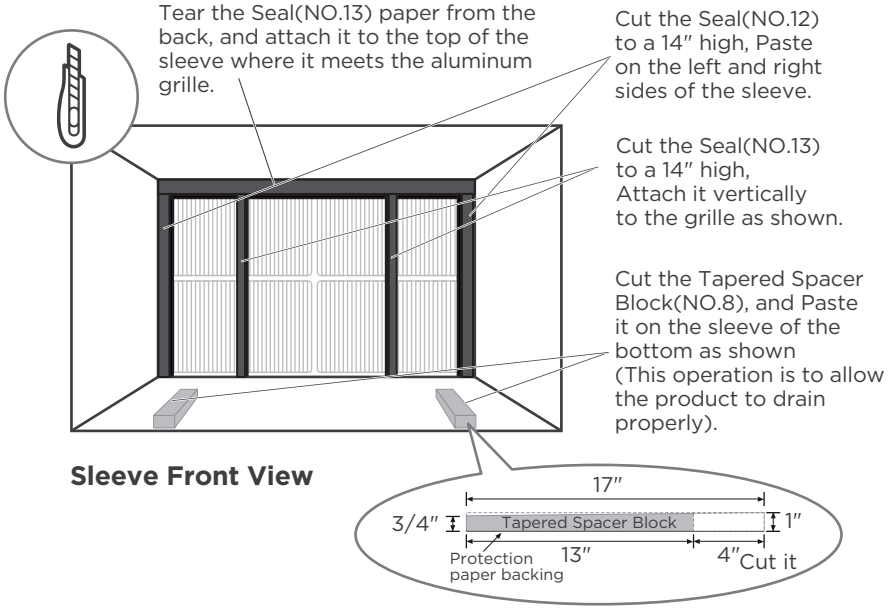

1

Paste the fixed Seal according to the above figure and instructions.

The Seals and blocks shown above are all backed with glue.
You need to tear the paper to paste and fix it When installing.
Please be careful when you cutting.

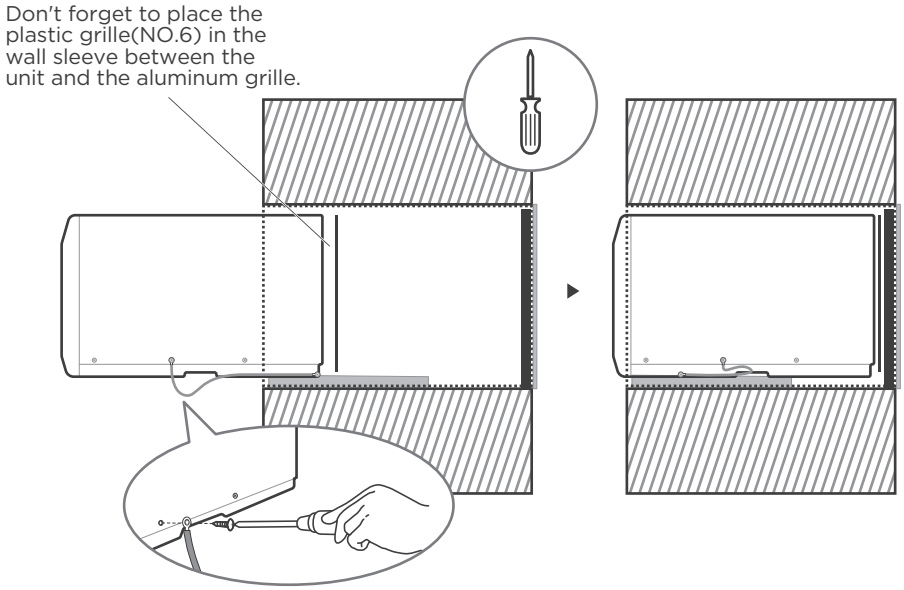

2

Complete grounding connection and product embedded wall sleeve.

Take out the unconnected end of the ground wire in the wall sleeve, and then embed the unit into the wall sleeve, as shown and then hold on. Use a screwdriver to unscrew the second screw below the unit and tighten the ground wire connection(Make sure that the toothed washer is against the cabinet).

Slide the unit completely to the rear to ensure a good seal, making sure the ground wire does not become tangled.

#5 Sears or Carrier 51S Series(18-5/8" Deep)

installation guide

NOTE

Complete the first installation step according to the wall cover installation guide (page 8) and aluminum grid installation guide (page 9) .

Guide to installation before embedding the product into the wall

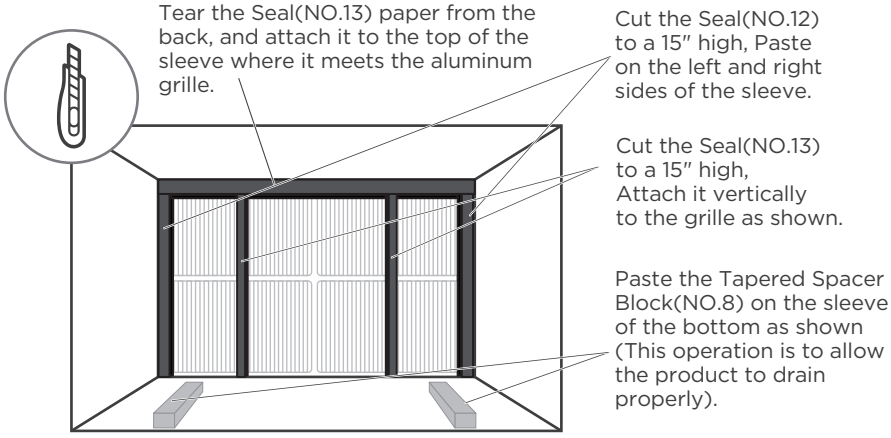

Sleeve Front View

1

Paste the fixed Seal according to the above figure and instructions.

The Seals and blocks shown above are all backed with glue.
You need to tear the paper to paste and fix it When installing.
Please be careful when you cutting.

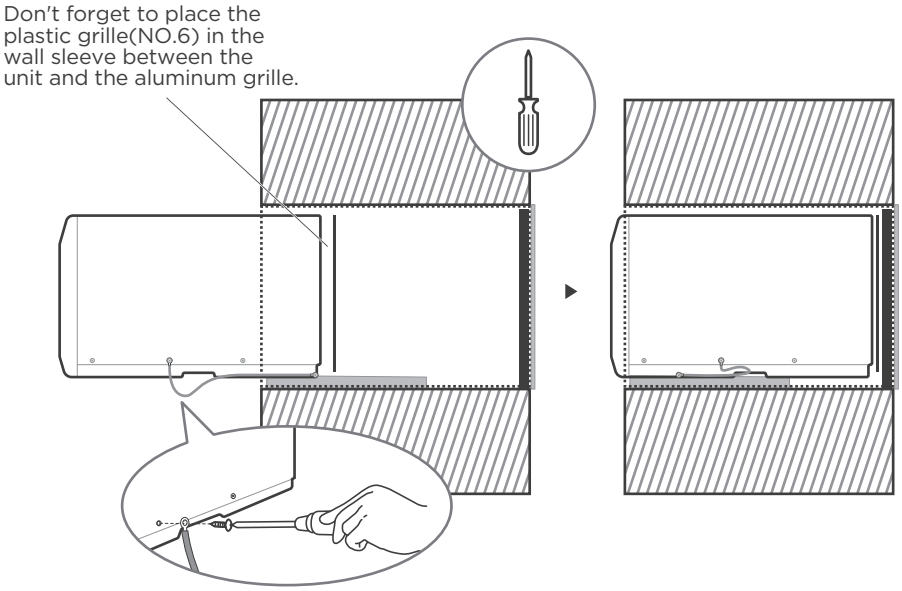

2

Complete grounding connection and product embedded wall sleeve.

Take out the unconnected end of the ground wire in the wall sleeve, and then embed the unit into the wall sleeve, as shown and then hold on. Use a screwdriver to unscrew the second screw below the unit and tighten the ground wire connection(Make sure that the toothed washer is against the cabinet).

Slide the unit completely to the rear to ensure a good seal, making sure the ground wire does not become tangled.

#6 Whirlpool(17-1/8″ Deep)

installation guide

NOTE

Complete the first installation step according to the wall cover installation guide (page 8) and aluminum grid installation guide (page 9) .

Guide to installation before embedding the product into the wall

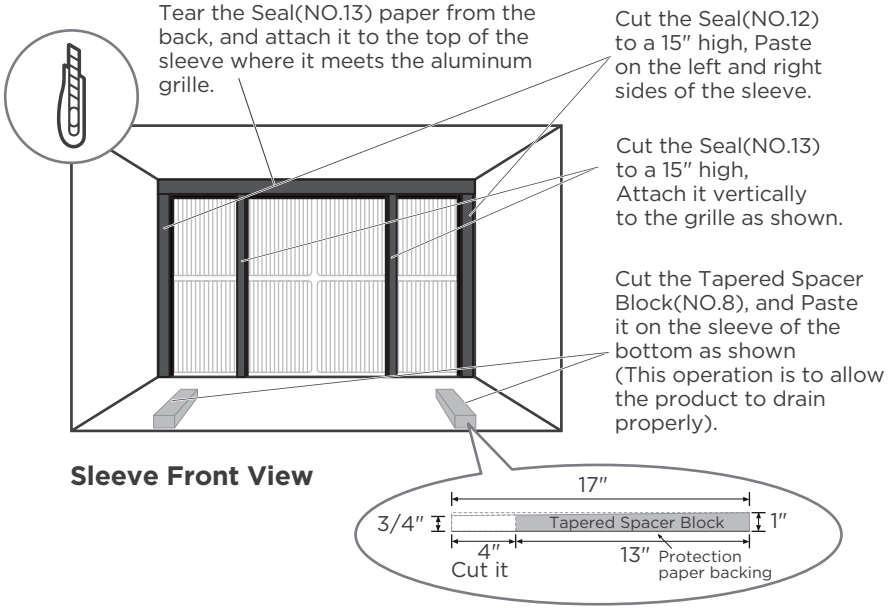

1

Paste the fixed Seal according to the above figure and instructions.

The Seals and blocks shown above are all backed with glue.
You need to tear the paper to paste and fix it When installing.
Please be careful when you cutting.

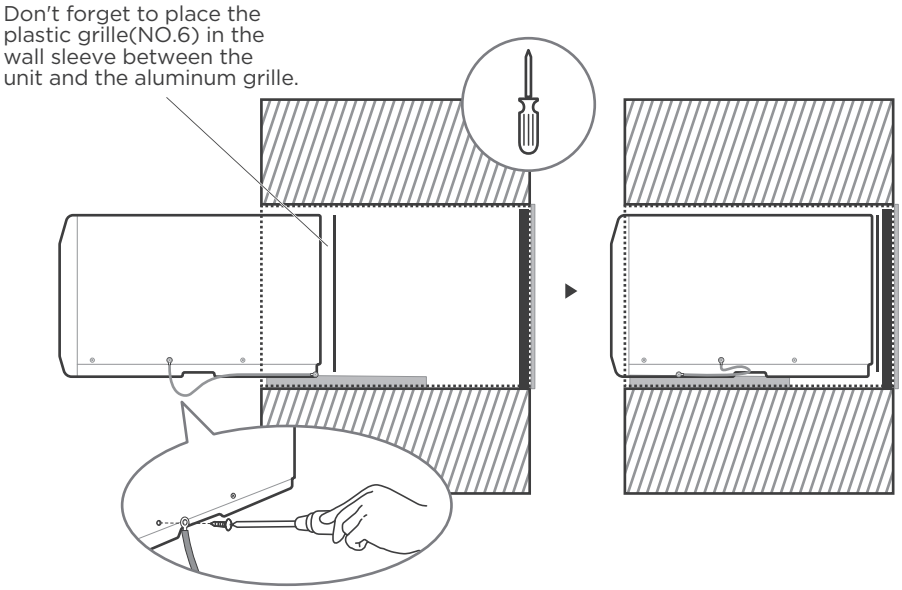

2

Complete grounding connection and product embedded wall sleeve.

Take out the unconnected end of the ground wire in the wall sleeve, and then embed the unit into the wall sleeve, as shown and then hold on. Use a screwdriver to unscrew the second screw below the unit and tighten the ground wire connection(Make sure that the toothed washer is against the cabinet).

Slide the unit completely to the rear to ensure a good seal, making sure the ground wire does not become tangled.

#7 Whirlpool(23″ Deep)

installation guide

NOTE

Complete the first installation step according to the wall cover installation guide (page 8) and aluminum grid installation guide (page 9) .

Guide to installation before embedding the product into the wall

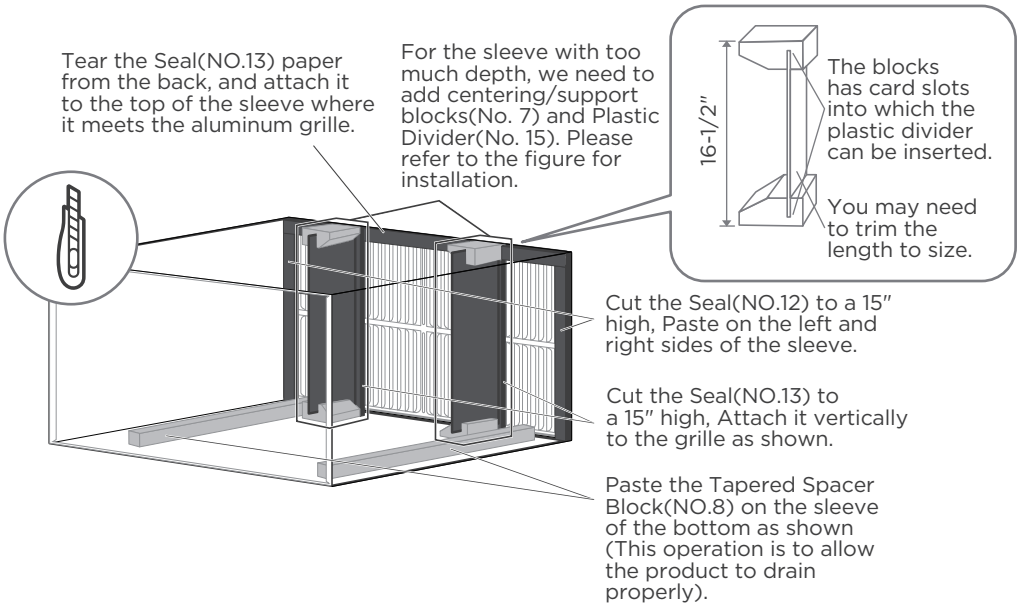

1

Paste the fixed Seal according to the above figure and instructions.

The Seals and blocks shown above are all backed with glue.

You need to tear the paper to paste and fix it When installing.

Please be careful when you cutting.

NOTE: There are two benefits to adding the rear plastic partition:

1. Effective air inlet and outlet interval between the air inlet and outlet grilles at the rear of the unit to improve the efficiency of air inlet and outlet
2. Play the role of stabilizing unit under product working condition.

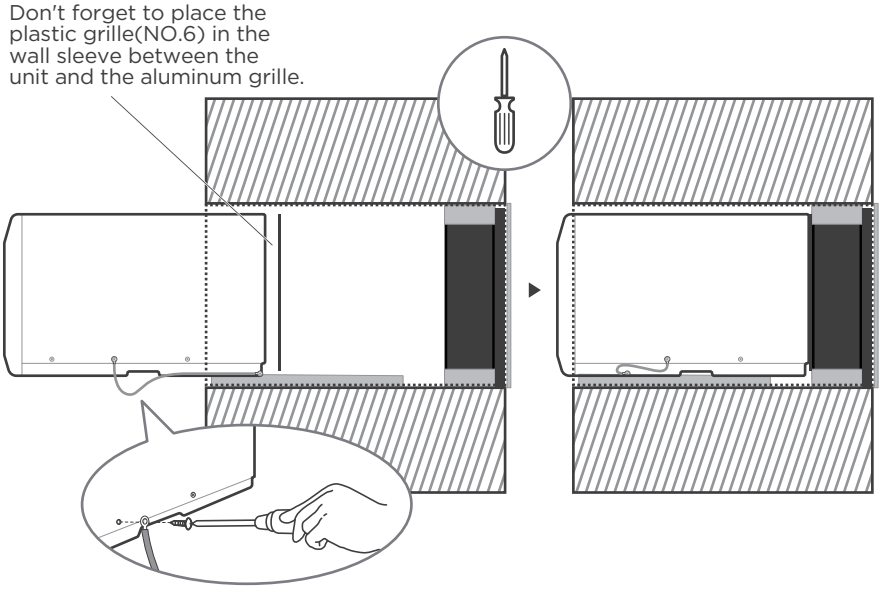

2

Complete grounding connection and product embedded wall sleeve.

Take out the unconnected end of the ground wire in the wall sleeve, and then embed the unit into the wall sleeve, as shown and then hold on. Use a screwdriver to unscrew the second screw below the unit and tighten the ground wire connection(Make sure that the toothed washer is against the cabinet).

Slide the unit completely to the rear to ensure a good seal, making sure the ground wire does not become tangled.

#8 White Westinghouse/Frigidaire/Carrier 52F Series(16/17-1/2" Deep)

installation guide

NOTE

Complete the first installation step according to the wall cover installation guide (page 8) and aluminum grid installation guide (page 9) .

Guide to installation before embedding the product into the wall

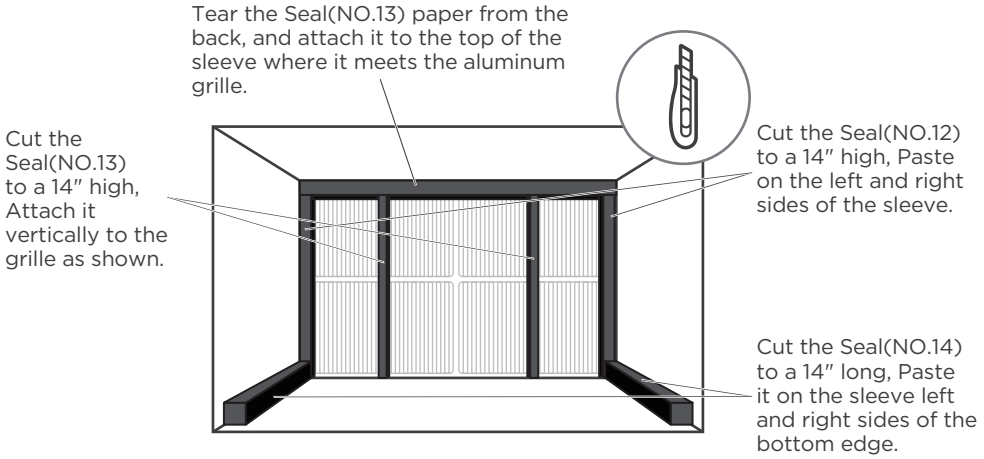

Sleeve Front View

1

Paste the fixed Seal according to the above figure and instructions.

The Seals and blocks shown above are all backed with glue.

You need to tear the paper to paste and fix it When installing.

Please be careful when you cutting.

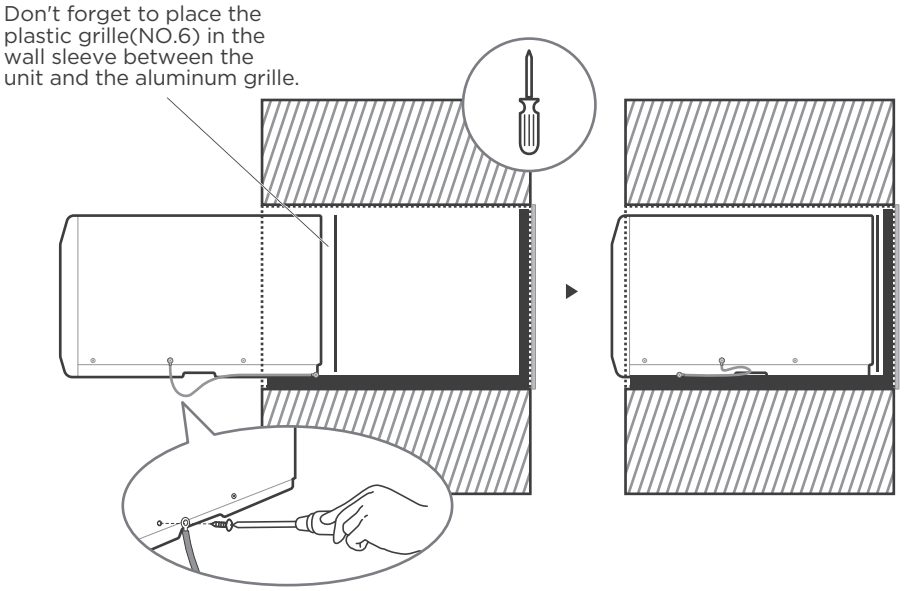

2

Complete grounding connection and product embedded wall sleeve.

Take out the unconnected end of the ground wire in the wall sleeve, and then embed the unit into the wall sleeve, as shown and then hold on. Use a screwdriver to unscrew the second screw below the unit and tighten the ground wire connection(Make sure that the toothed washer is against the cabinet).

Slide the unit completely to the rear to ensure a good seal, making sure the ground wire does not become tangled.

#9 White Westinghouse or Frigidaire(22″ Deep)

installation guide

NOTE

Complete the first installation step according to the wall cover installation guide (page 8) and aluminum grid installation guide (page 9) .

Guide to installation before embedding the product into the wall

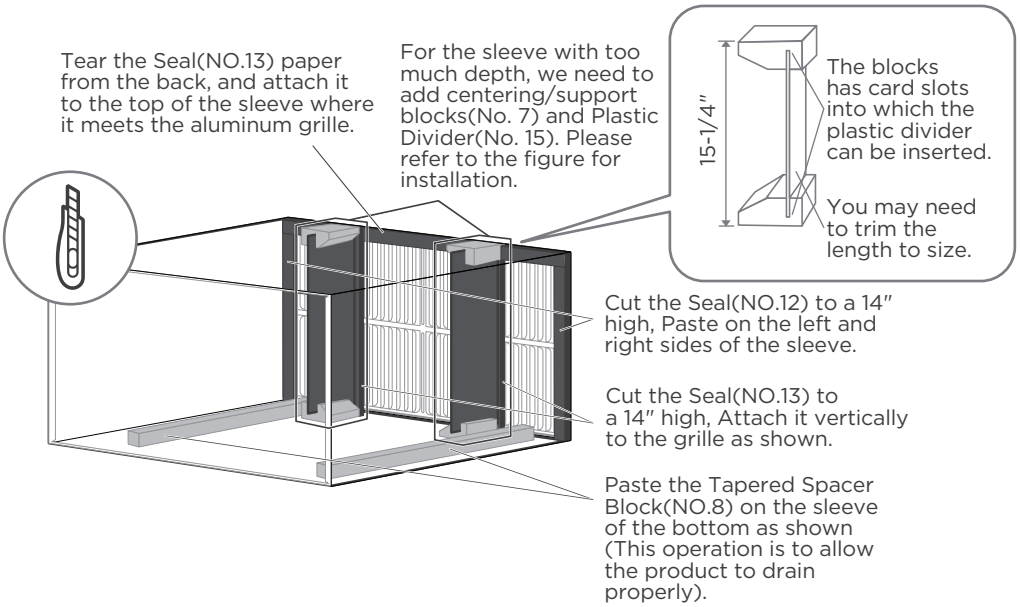

1

Paste the fixed Seal according to the above figure and instructions.

The Seals and blocks shown above are all backed with glue.

You need to tear the paper to paste and fix it When installing.

Please be careful when you cutting.

NOTE: There are two benefits to adding the rear plastic partition:

1. Effective air inlet and outlet interval between the air inlet and outlet grilles at the rear of the unit to improve the efficiency of air inlet and outlet
2. Play the role of stabilizing unit under product working condition.

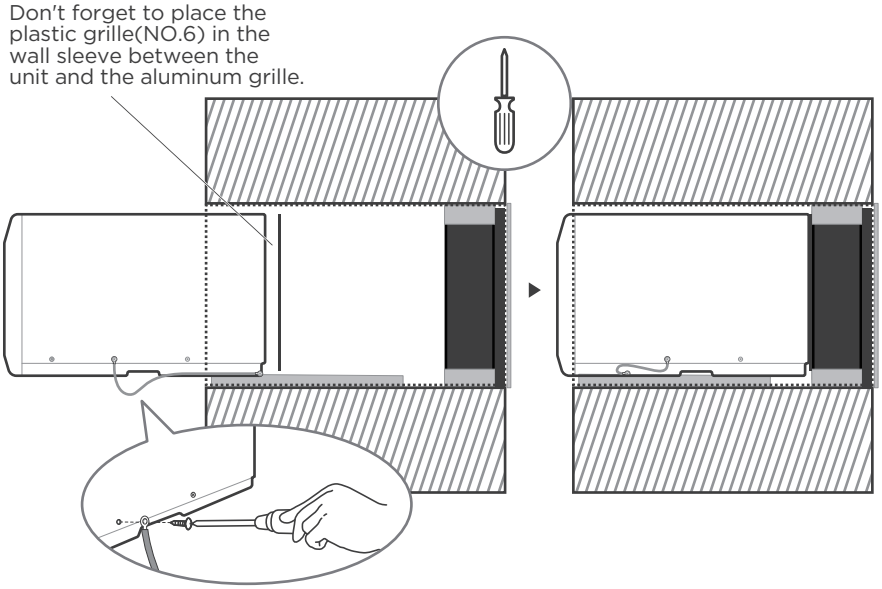

2

Complete grounding connection and product embedded wall sleeve.

Take out the unconnected end of the ground wire in the wall sleeve, and then embed the unit into the wall sleeve, as shown and then hold on. Use a screwdriver to unscrew the second screw below the unit and tighten the ground wire connection(Make sure that the toothed washer is against the cabinet).

Slide the unit completely to the rear to ensure a good seal, making sure the ground wire does not become tangled.

You can installing aluminum grille at first.

installation guide

NOTE

- The previous directions are the preferable way to mount the new Aluminum Grill. The units performance is slightly better and the possibility of draughts is reduced. As a last resort, direct mounting of the grille to the unit can be considered (the installation tutorial follows).
- The Aluminum Grille must be installed prior to inserting the unit into the sleeve.

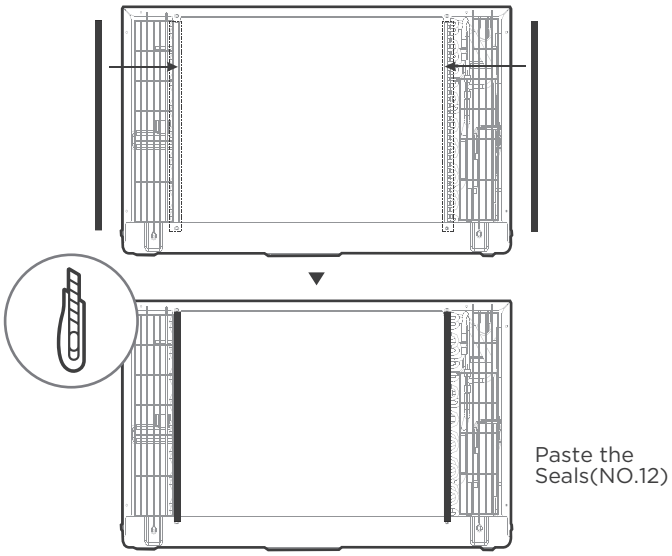

1

Paste the Seals(NO.12) as shown.

Paste the Seals(NO.12) as shown. It provides a safe distance between the fins and the Aluminum Grille, and acts as a buffer to prevent them from touching.

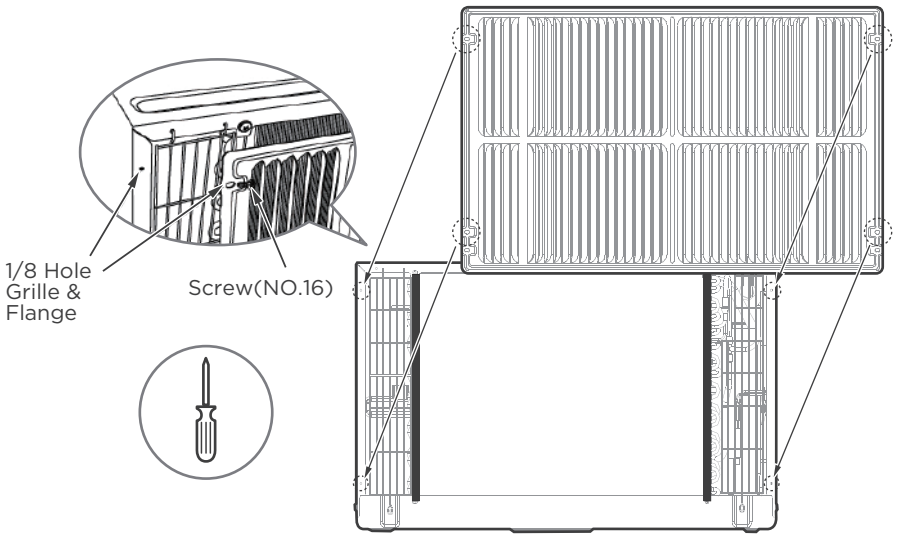

2

Install the unit with the Aluminum Grille and embed it into the Wall Sleeve.

Line up the Aluminum Grille with the rear hole of the unit as shown, then tighten and secure it using Screws and Screw Washer(NO.16).
The protruding side of the aluminum grille fin needs to be mounted outwards.

If the unit has not been pre-drilled, carefully drill four 1/8″ holes through the grille and into the side flange of the unit, then fasten it with Screws(NO.16). Be careful not to drill into the copper heat exchanger coils.
Finally, insert the unit into the sleeve.

Finally, do some cosmetic work on your product.

installation guide

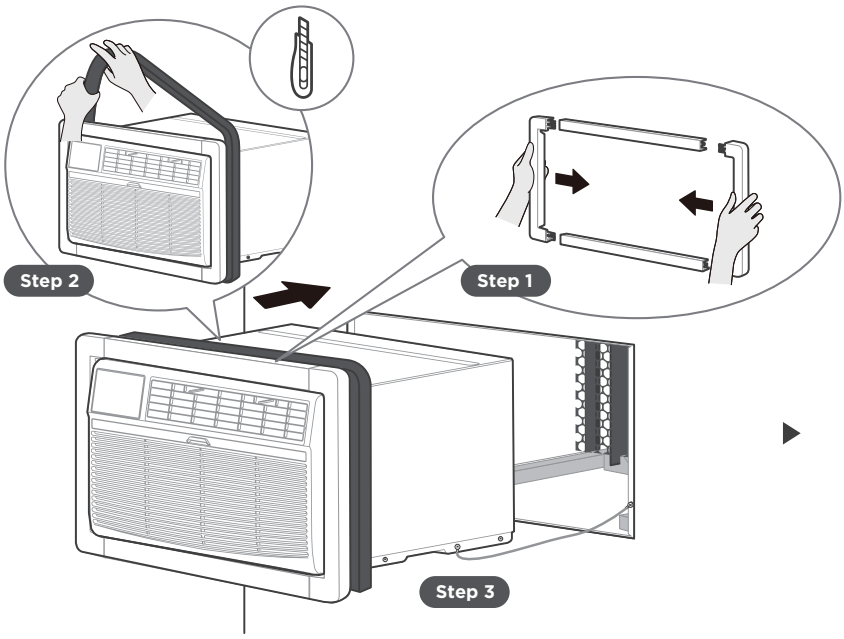

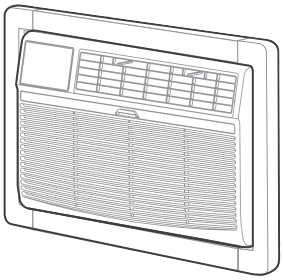

1

Do some cosmetic work.

Step 1: Assemble the Trim Frame(NO.2) by inserting top and bottom pieces into side pieces(NO.3), and embed it into the unit flush with the front panel.

Step 2: Install the Long Stuffer-seal(NO.9) between the wall-sleeve and the unit.
Wrap the foam tightly around the fuselage and carefully cut off any excess using a knife.

Step 3: Slide the frame, seal and unit carefully into the Wall Sleeve for internal fixation, taking care that the grounding wire is also properly placed and not damaged.

2

The installation is complete.

Congratulations on the installation, but you're not done yet. Take a break! And then, get to know your product better.

GET TO KNOW YOUR AC.

AC unit overview

Components of the product

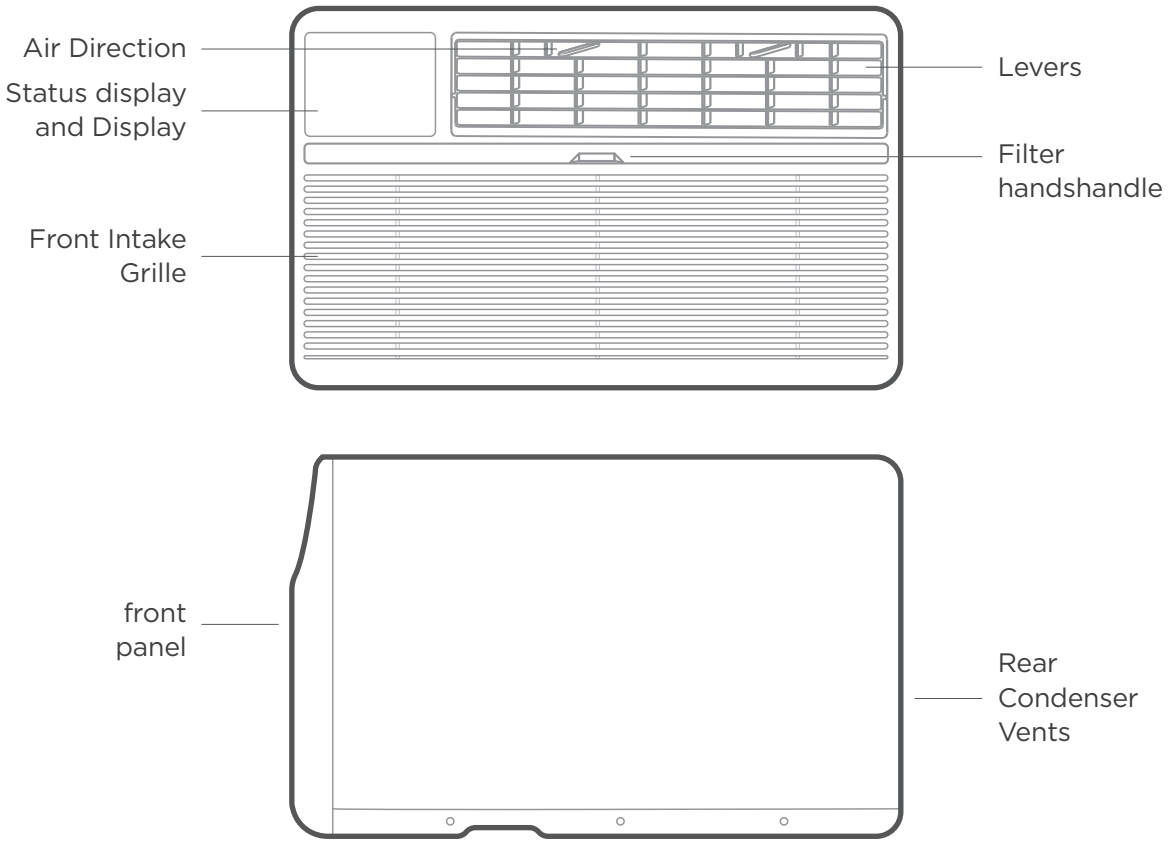

Adjust the Air Direction

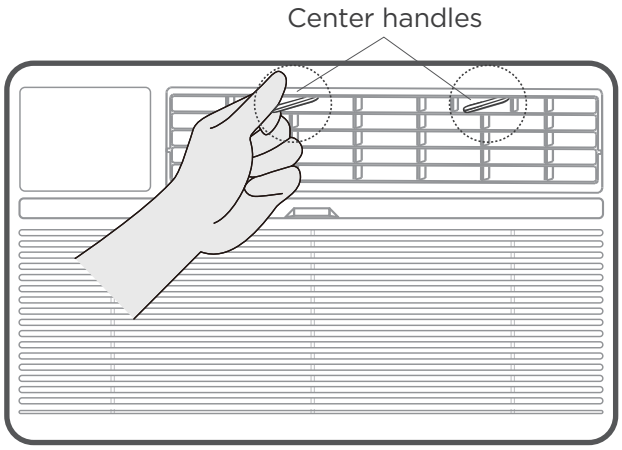

Air directional louvers control air flow direction. Your air conditioner has the 4-way directional system described below.The louvers will allow you to direct the air flow Up or Horizontal, and Left or Right throughout the room as needed.Use the center handles to adjust the air directional louvers side-to-side until the desired Left or Right direction is obtained.Pivot horizontal louvers with your fingertips until the desired Up or Horizontal direction is obtained.There are a total of 4 possible air directional orientations available with this system.

CAUTION: Do not stick your fingers in the air outlet, it may cause an injury.

GET TO KNOW THE FEATURES.

ELECTRONIC CONTROL OPERATING INSTRUCTIONS

NOTE

- Before you begin, thoroughly familiarize yourself with the control panel as shown below and all its functions, then follow the symbol for the functions you desire. The unit can be controlled by the unit control alone or with the remote.
- This control panel is based on the typical model. Not all the functions describing in this manual are available for all the models.The machine you purchased may be slightly different.
- If the unit breaks off unexpectedly due to the power cut, it will restart with the previous function setting automatically when the power resumes.

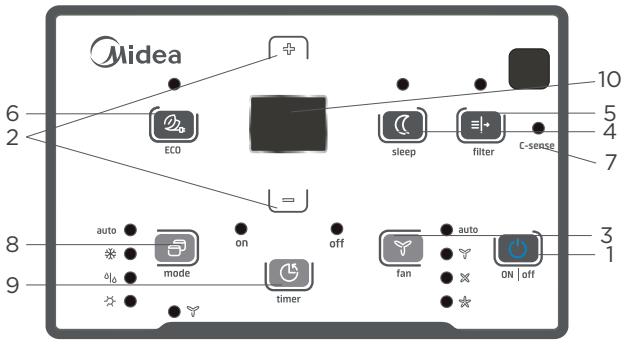

(Cooling Only Model does not have HEAT Mode ☼)

		Description
1	**TO TURN UNIT ON OR OFF:**	Press ⏻ POWER button to turn unit on or off. **NOTE:** The unit will initiate automatically the Energy Saver function under Cool, Dry, Auto(only Auto-Cooling and Auto-Fan) modes.
2	**TO CHANGE TEMPERATURE SETTING:**	Press ▲ / ▼ UP/DOWN buttonto change temperature setting. **NOTE:** Press or hold either UP or DOWN button until the desired temperature is seen on the display. This temperature will be automatically maintained anywhere between 62°F(17°C) and 86°F(30°C). If you want the display to read the actual room temperature, see To Operate on Fan Only section.
3	**TO ADJUST FAN SPEEDS:**	Press to select the Fan Speed in four steps-Auto, Low, Med or High. Each time the button is pressed, the fan speed mode is shifted. For some models, the fan speed can not be adjusted under HEAT mode. On Dry mode, the fan speed is controlled at Low automatically.
4	**SLEEP FEATURE:**	Press Sleep button to initiate the sleep mode. In this mode the selected temperature will increase (cooling) or decrease (heating) by 2°F/1°C 30 minutes after the mode is selected. The temperature will then increase (cooling) or decrease(heating) by an other 2°F/1°C after an additional 30 minutes. This new temperature will be maintained for 7 hours before it returns to the originally selected temperature. This ends the Sleep mode and the unit will continue to operate as originally programmed. The Sleep mode program can be cancelled at any time during operation by pressing the Sleep button again.
5	**CHECK FILTER FEATURE:**	Press Check filter button to initiate the feature. This feature is a reminder to clean the Air Filter for more efficient operation. The LED(light) will illuminate after 250 hours of operation. To reset after cleaning the filter, press the Check Filter button and the light will go off.

ELECTRONIC CONTROL OPERATING INSTRUCTIONS

		Description
6	**ENERGY SAVER FEATURE:**	Press Energy saver button to initiate this function. This function is available on COOL, DRY, AUTO (only AUTO-COOLING and AUTO-FAN) modes.The fan will continue to run for 3 minutes after the compressor shuts off. The fan then cycles on for 2 minutes at 10 minutes intervals until the room temperature is above the set temperature, at which time the compressor turns back on and Cooling Starts.
7	**C-SENSE FEATURE:**	This feature can be activated from the remote control ONLY. The remote control serves as a remote thermostat allowing for the precise temperature control at its location. To activate the C-SENSE feature, point the remote control towards the unit and press the C-SENSE button. The remote display is actual temperature at its location. The remote control will send this signal to the air conditioner every 3 minutes interval until press the C-SENSE button again. If the unit does not receive the C-SENSE signal during any 7 minutes interval, the unit will beep to indicate the C-SENSE mode has ended.
8	**TO SELECT THE OPERATING MODE:**	To choose operating mode, press Mode button. Each time you press the button, a mode is selected in a sequence that goes from Auto, Cool, Dry, heat(cooling only models without) and Fan. The indicator light beside will be illuminated and remained on once the mode is selected. The unit will initiate automatically the Energy Saver function under Cool, Dry, Auto(only Auto-Cooling and Auto-Fan) modes. **To operate on Auto feature:** • When you set the air conditioner in AUTO mode, itwill automatically select cooling, heating (cooling only models without), or fan only operation depending on what temperature you have selected and the room temperature. • The air conditioner will control room temperature automatically round the temperature point set by you. • The air conditioner will control room temperature automatically round the temperature point set by you. • In this mode, the fan speed cannot be adjusted, it starts automatically at a speed according to the room temperature. **To operate on COOL mode:** • Choose Cool Mode to set the cooling function. Use the Up and Down buttons to choose the desired temperature. When Cool Mode is selected, the fan speed can be adjusted by pressing the fan button. **To operate on HEAT mode (cooling only models are excluded):** • Choose Heat mode to start heating operation. Use Up and Down buttons to set the desired temperature. Press the fan button to select the fan speed. For some models, the fan speed can't be adjusted. **To operate on Fan Only:** • Use this function only when cooling is not desired, such as for room air circulation or to exhaust stale air(optional)-Remember to open the vent during this function, but keep it closed during cooling for maximum cooling efficiency. You can choose any fan speed you prefer. • During this function, the display will show the actual room temperature, not the set temperature as in the cooling mode. • In Fan only mode, the temperature is not adjusted. **To operate on Dry mode:** • In this mode, the air conditioner will generally operate in the form of a dehumidifier. Since the conditioned space is a closed or sealed area, some degree of cooling will continue.

ELECTRONIC CONTROL OPERATING INSTRUCTIONS

		Description
9	**TIMER: AUTO START/STOP FEATURE:**	• When the unit is on or off, first press Timer button, the TIMER ON indicator light illuminates. It indicates the Auto Start program is initiated. • When the time of TIMER ON is displayed, press the Timer button again, the TIMER OFF indicator light illuminates. It indicates the Auto Stop program is initiated. • Press or hold the UP or DOWN button to change the Auto time by 0.5 hour increments, up to 10 hours, then at 1 hour increments up to 24 hours.The control will count down the time remaining until start. • The selected time will register in 5 seconds, and the system will automatically revert back to display the previous temperature setting or room temperature when the unit is on (when the unit is off,there is no display). • Turning the unit ON or OFF at any time or adjusting Turning the unit ON or OFF at any time or adjusting the timer setting to 0.0 will cancel the Auto Start/Stop timed program.
10	**DISPLAY:**	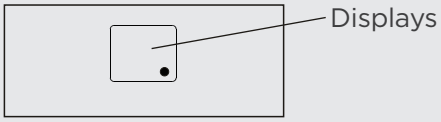 Shows the set temperature in "°C" or "°F " and the Auto-timer settings. While on Fan only mode, it shows the room temperature. If the room temperature is too high or low, it will display “HI” or “LO”. **Error codes:** **AS**-Room temperature sensor error-Unplug the unit and plug it back in. If error repeats, call for service. **ES**-Evaporator temperature sensor error-Unplug the unit and plug it back in. If error repeats, call for service. **HS**-Electric heating sensor error-Unplug the unit and plug it back in. If error repeats, call for service. **CS**-The sensor of the outdoor unit condenser is faulty-Unplug the unit and plug it back in. If error repeats, call for service. **oS**-Room temperature sensor error-Unplug the unit and plug it back in. If error repeats, call for service. **E3**-The fan stall error-Unplug the unit and plug it back in. If error repeats, call for service. **E0**-Failure of EEPROM parameter-Unplug the unit and plug it back in. If error repeats, call for service.

One more thing

Additional Notes

1

Your AC may look a little different.

All the illustrations in this manual are for explanation purpose only. Your air conditioner may be slightly different. The actual shape shall prevail.

2

Additional things you should know.

Now that you have mastered the operating procedure, here are more features in your control that you should become familiar with.

- The Cool circuit has an automatic 3 minutes time delayed start if the unit is turned off and on quickly. This prevents overheating of the compressor and possible circuit breaker tripping.The fan will continue to run during this time.
- The control is capable of displaying temperature in degrees Fahrenheit or degrees Celsius. To convert from one to the other, press and hold the Left and Right Temp/Timer buttons at the same time, for 3 seconds.

3

Normal Sounds / Sound Performance

High Pitched Chatter

High efficiency compressors may have a high pitched chatter during the cooling cycle.

Sound of Rushing Air

At the front of the unit, you may hear the sound of rushing air being moved by the fan.

Gurgle/Hiss

“Gurgling or hissing” noise may be heard due to refrigerant passing through evaporator during normal operation.

Vibration

Unit may vibrate and make noise because of poor wall or window construction or incorrect installation.

Pinging or Switching

Droplets of water hitting condenser during normal operation may cause “pinging or switching” sounds.

Remote Controller Specifications

Model	RG51G(1)/CEFU1,RG51G(1)/EFU1
Rated Voltage	3.0V(Dry batteries R03/LR03×2)
Signal Receiving Range	8m
Environment	23°F~140°F (-5°C~60°C)

Quick Start Guide

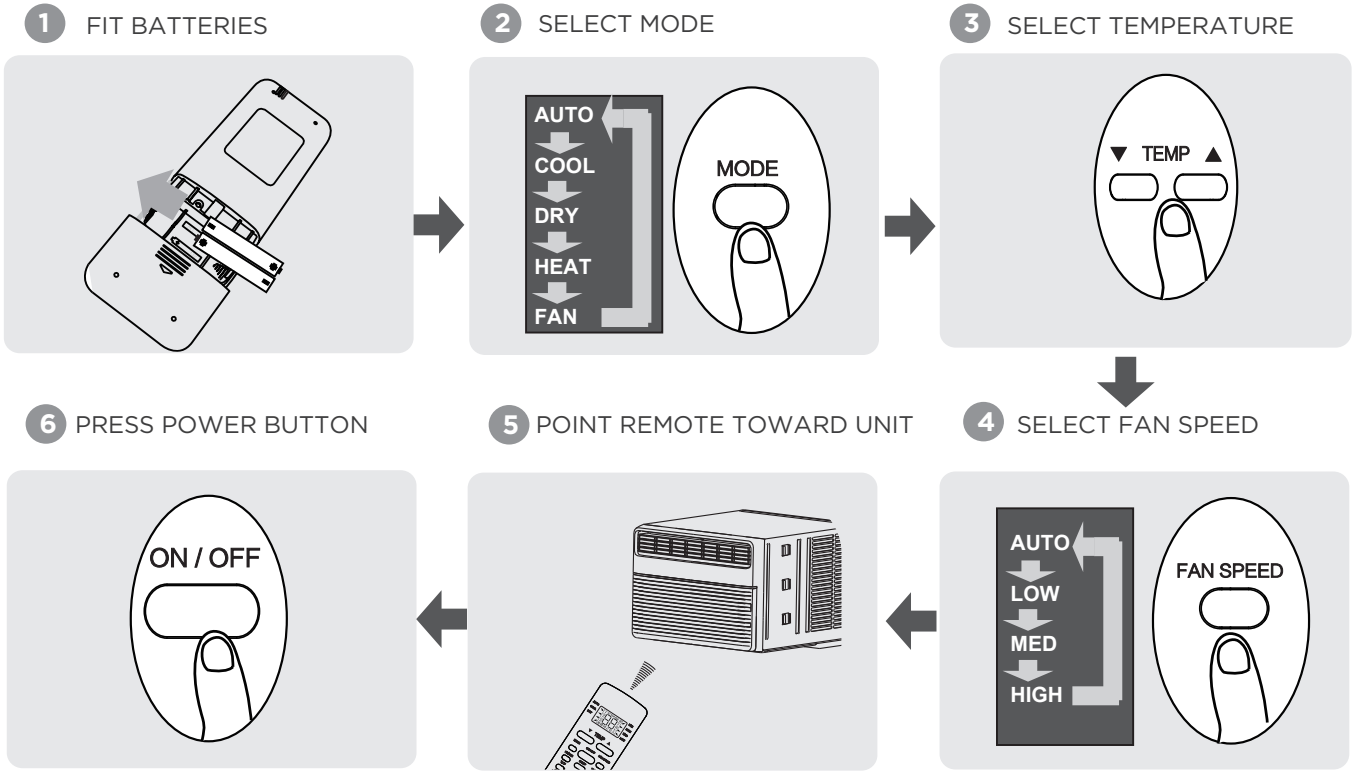

NOT SURE WHAT A FUNCTION DOES?
Refer to the **How to Use Basic Functions** and **How to Use Advanced Functions** sections of this manual for a detailed description of how to use your air conditioner.

SPECIAL NOTE

- Button designs on your unit may differ slightly from the example shown.
- If the indoor unit does not have a particular function, pressing that function's button on the remote control will have no effect.
- When there are wide differentces between "Remote controller Manual" and "USER'S MANUAL" on function description, the description of "USER'S MANUAL" shall prevail.

Handling the Remote Controller

Inserting and Replacing Batteries

Your air conditioning unit may come with two batteries(some units). Put the batteries in the remote control before use.

1. Slide the back cover from the remote control downward, exposing the battery compartment.
2. Insert the batteries, paying attention to match up the (+) and (-) ends of the batteries with the symbols inside the battery compartment.
3. Slide the battery cover back into place.

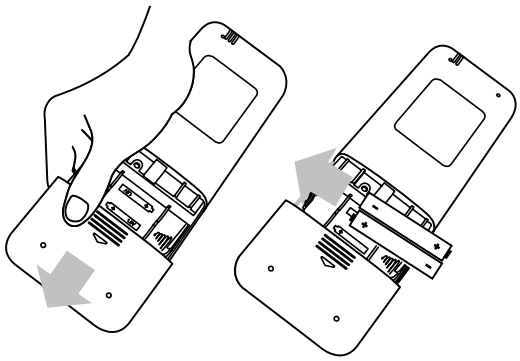

BATTERY NOTES

For optimum product performance:

- Do not mix old and new batteries, or batteries of different types.
- Do not leave batteries in the remote control if you don't plan on using the device for more than 2 months.

BATTERY DISPOSAL

Do not dispose of batteries as unsorted municipal waste. Refer to local laws for proper disposal of batteries.

TIPS FOR USING REMOTE CONTROL

- The remote control must be used within 8 meters of the unit.
- The unit will beep when remote signal is received.
- Curtains, other materials and direct sunlight can interfere with the infrared signal receiver.
- Remove batteries if the remote will not be used more than 2 months.

NOTES FOR USING REMOTE CONTROL

The device could comply with the local national regulations.

- In Canada, it should comply with CAN ICES-3(B)/NMB-3(B).
- In USA, this device complies with part 15 of the FCC Rules. Operation is subject to the following two conditions:
  (1) This device may not cause harmful interference, and
  (2) this device must accept any interference received, including interference that may cause undesired operation.

This equipment has been tested and found to comply with the limits for a Class B digital device, pursuant to part 15 of the FCC Rules. These limits are designed to provide reasonable protection against harmful interference in a residential installation. This equipment generates, uses and can radiate radio frequency energy and, if not installed and used in accordance with the instructions, may cause harmful interference to radio communications. However, there is no guarantee that interference will not occur in a particular installation. If this equipment does cause harmful interference to radio or television reception, which can be determined by turning the equipment off and on, the user is encouraged to try to correct the interference by one or more of the following measures:

- Reorient or relocate the receiving antenna.
- Increase the separation between the equipment and receiver.
- Connect the equipment into an outlet on a circuit different from that to which the receiver is connected.
- Consult the dealer or an experienced radio/TV technician for help.
- Changes or modifications not approved by the party responsible for compliance could void user's authority to operate the equipment.

Buttons and Functions

Before you begin using your new air conditioner, make sure to familiarize yourself with its remote control. The following is a brief introduction to the remote control itself. For instructions on how to operate your air conditioner, refer to the How to Use Basic Functions section of this manual.

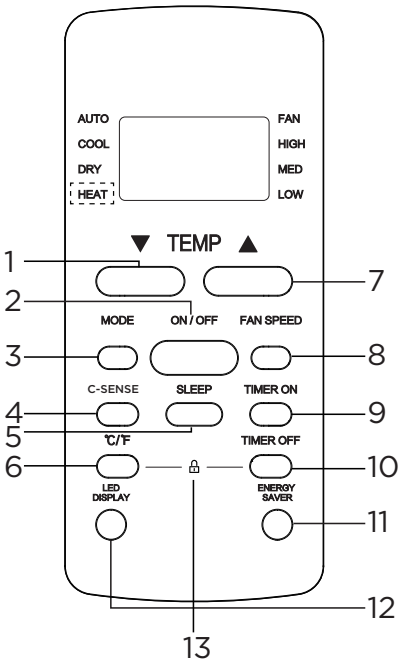

Model:
RG51G(1)/CEFU1
RG51G(1)/EFU1

NOTE: Model RG51G(1)/CEFU1 does not have HEAT feature.

Description		
No.1	▼	**TEMP** Decreases temperate in1°F (1°C) increments. Min. temperature is 62°F(17°C).
No.2	ON / OFF	**ON/OFF** Turns the unit on or off.
No.3	MODE	**MODE** Scrolls through operation modes as follows: **AUTO → COOL → DRY → HEAT → FAN** NOTE: Please do notselect HEAT mode if the machine you purchased is cooling only type. Heat mode is not supported by the cooling only appliance.
No.4	C-SENSE	**C-SENSE** Press this button to activate the C-SENSE mode.
No.5	SLEEP	**SLEEP** Saves energy during sleeping hours.
No.6	℃/F	**°C/°F** The temperature display between the °C & °F.
No.7	▲	**TEMP** Increases temperate in1°F (1°C) increments. Max. temperature is 86°F(30°C).
No.8	FAN SPEED	**FAN SPEED** Selects fan speeds in the following order: **AUTO → LOW → MED → HIGH**
No.9	TIMER ON	**TIMER ON** Sets timer to turn unit on (see How to Use Basic Functions for instructions).
No.10	TIMER OFF	**TIMER OFF** Sets timer to turn unit off (see How to UseBasic Functions for instructions).
No.11	ENERGY SAVER	**ENERGY SAVER** Press this button to activate the Energy saving mode. Press it again to stop the funtion.
No.12	LED DISPLAY	**LED DISPLAY** Turns indoor unit's LED display and air conditioner buzzer on and off (model dependent), which create a comfortable and quiet environment.
No.13	℃/F — 🔒 — TIMER OFF	**LOCK** Press together °C/°F & TIMER OFF buttons simultaneously for 5 seconds to lock the keyboard. Press together the two buttons for 2 seconds to unlock the keyboard.

Remote Screen Indicators

Information are displayed when the remote controller is power up.

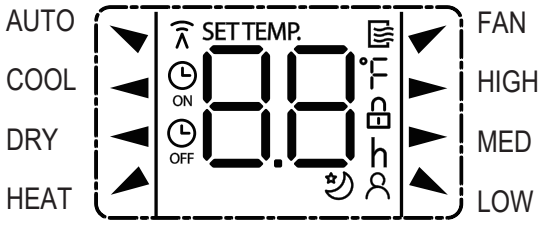

Mode display

AUTO COOL DRY
HEAT FAN

Displayed when data transmitted.

Displayed when remote controller is ON.

Displayed when TIMER ON time is set.

Displayed when TIMER OFF time is set.

Shows set temperature or room temperature, or time under TIMER setting.

Indicated all the current settings are locked.

Displayed when C-SENSE feature is activated (some units)

Displayed when SLEEP feature is activated.

Fan speed indication

HIGH	High speed
MED	Medium speed
LOW	Low speed
NO display	Auto fan speed

Note:
All indicators shown in the figure are for the purpose of clear presentation.
But during the actaul operation, only the relative function signs are shown on the display window.

How to Use Basic Functions

Basic operation

ATTENTION! Before operation, please ensure the unit is plugged in and power is available.

COOL Mode

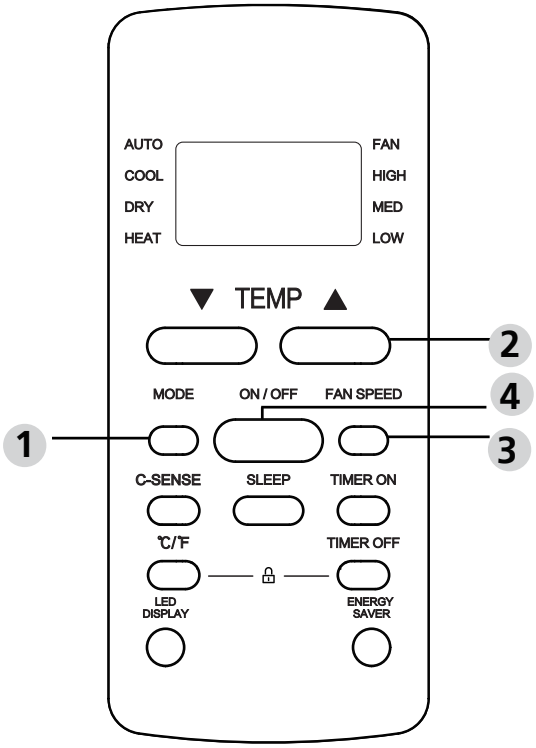

1. Press the MODE button to select **COOL** mode.
2. Set your desired temperature using the **TEMP ▲** or **TEMP ▼** button.
3. Press **FAN** button to select the fan speed: AUTO, LOW, MED or HIGH.
4. Press the **ON/OFF** button to start the unit.

SETTING TEMPERATURE

The operating temperature range for units is 62-86°F(17-30°C). You can increase or decrease the set temperature 1°F(1°C) increments.

AUTO Mode

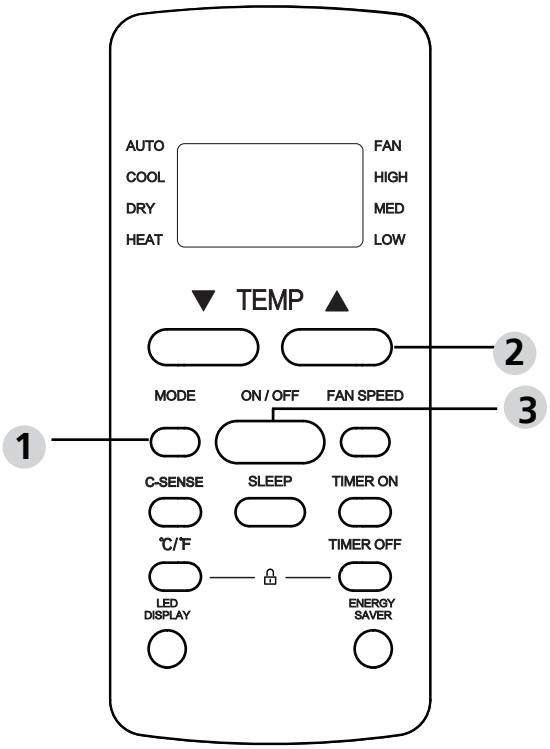

In AUTO mode, the unit will automatically select the COOL, FAN, or HEAT operation based on the set temperature.

1. Press the **MODE** button to select **AUTO**.
2. Set your desired temperature using the **TEMP ▲** or **TEMP ▼** button.
3. Press the **ON/OFF** button to start the unit.

NOTE: FAN SPEED can't be set in AUTO mode.

In AUTO mode, the unit will automatically select the COOL, FAN, HEAT or DRY function based on the set temperature.

1. Press the **MODE** button to select **AUTO**.
2. Set your desired temperature using the **TEMP ▲** or **TEMP ▼** button.
3. Press the **ON/OFF** button to start the unit.

NOTE: FAN SPEED can't be set in AUTO mode.

How to Use Basic Functions

FAN Mode

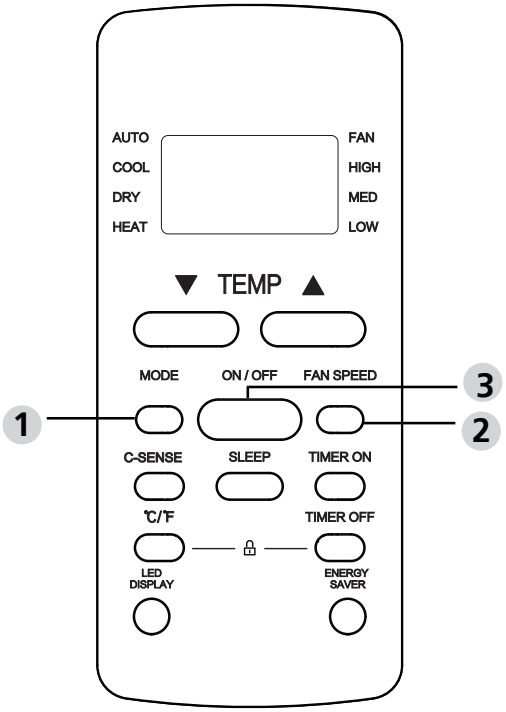

1. Press the **MODE** button to select **FAN** mode.
2. Press **FAN** button to select the fan speed: AUTO, LOW, MED or HIGH.
3. Press the **ON/OFF** button to start the unit.

NOTE: You can't set temperature in FAN mode. As a result, your remote control's LCD screen will not display temperature.

DRY Mode (dehumidifying)

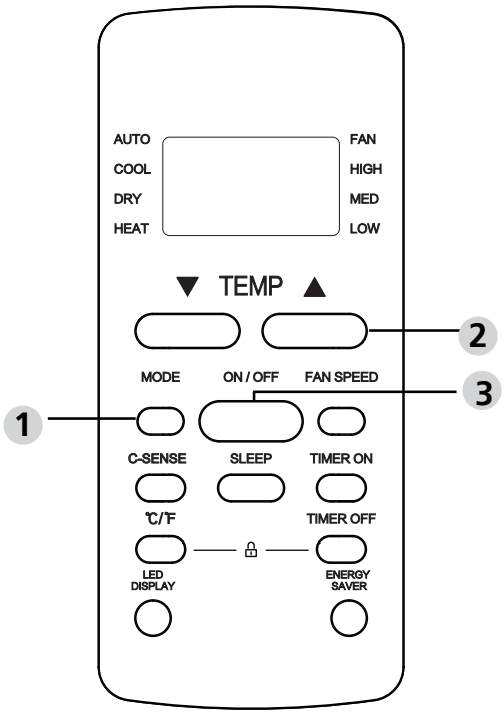

1. Press the **MODE** button to select **DRY**.
2. Set your desired temperature using the **TEMP ▲** or **TEMP ▼** button.
3. Press the **ON/OFF** button to start the unit.

NOTE: FAN SPEED cannot be changed in DRY mode.

HEAT Mode (some models)

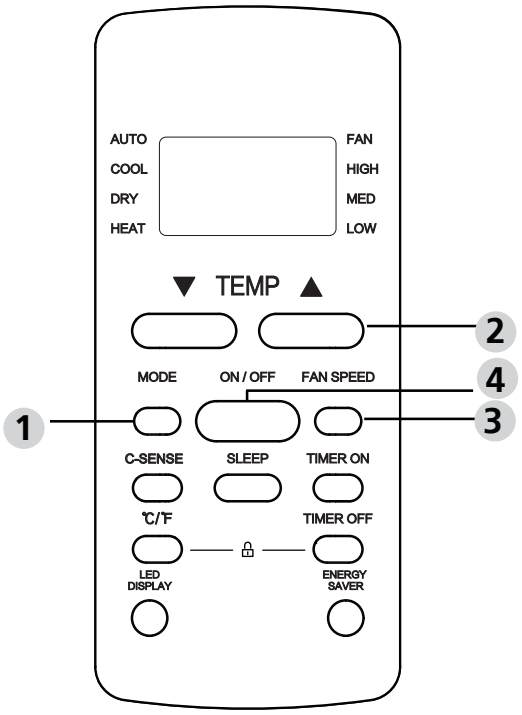

1. Press the **MODE** button to select **HEAT** mode.
2. Set your desired temperature using the **TEMP ▲** or **TEMP ▼** button.
3. Press **FAN** button to select the fan speed: AUTO, LOW, MED or HIGH.
4. Press the **ON/OFF** button to start the unit.

NOTE: As outdoor temperature drops, the performance of your unit's HEAT function may be affected. In such instances, we recommend using this air conditioner in conjunction with other heating appliances.

How to Use Basic Functions

Setting the TIMER

TIMER ON/OFF - Set the amount of time after which the unit will automatically turn on/off.

TIMER ON setting

Press TIMER ON button to initiate the ON time sequence.

Press Temp. up or down button for for multiple times to set the desired time to turn on the unit.

Point remote to unit and wait 1sec, the TIMER ON will be activated.

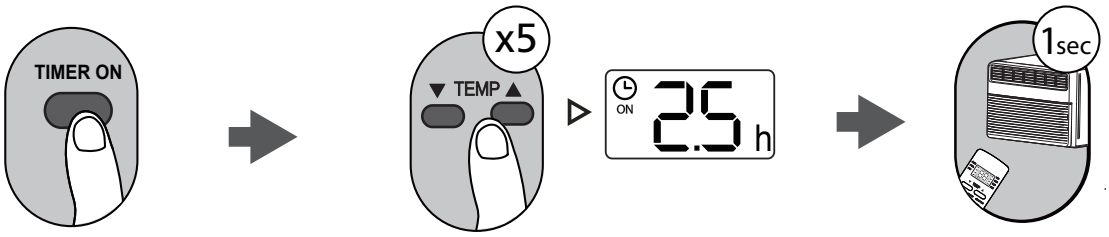

TIMER OFF setting

Press TIMER OFF button to initiate the OFF time sequence.

Press Temp. up or down button for for multiple times to set the desired time to turn off the unit.

Point remote to unit and wait 1sec, the TIMER OFF will be activated.

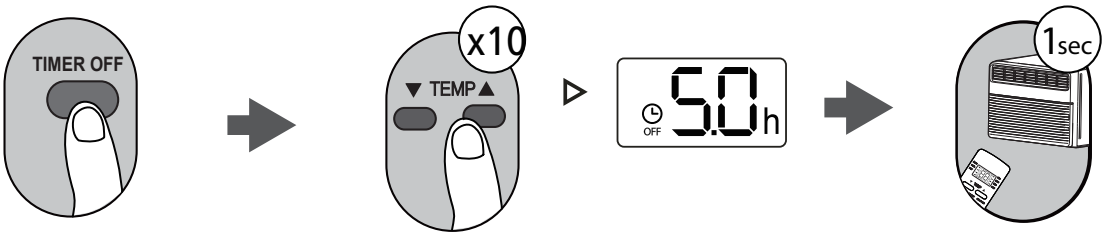

NOTE:

1. When setting the TIMER ON or TIMER OFF, the time will increase by 30 minutes increments with each press, up to 10 hours. After 10 hours and up to 24, it will increase in 1 hour increments. (For example, press 5 times to get 2.5h, and press 10 times to get 5h,) The timer will revert to 0.0 after 24.
2. Cancel either function by setting its timer to 0.0h.

TIMER ON & OFF setting(example)

Keep in mind that the time periods you set for both functions refer to hours after the current time.

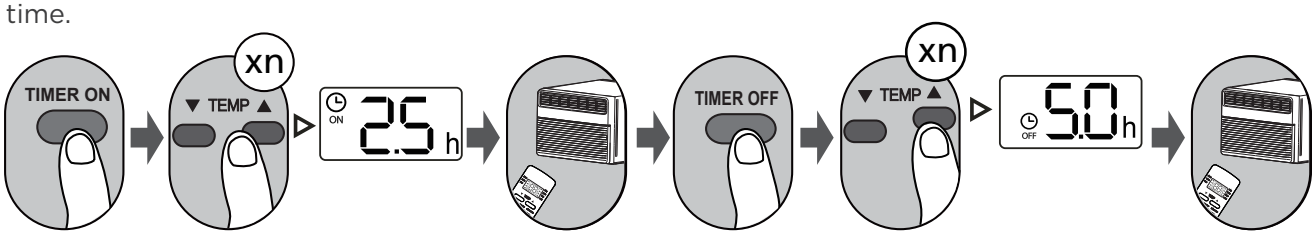

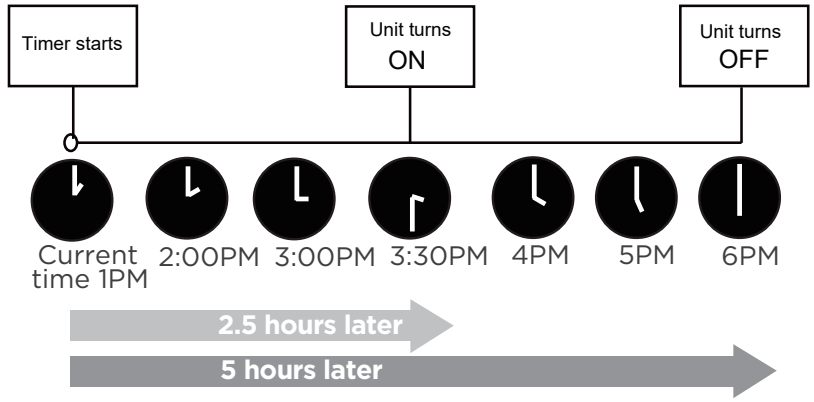

Example: If current timer is 1:00PM, to set the timer as above steps, the unit will turn on 2.5h later (3:30PM) and turn off at 6:00PM.

How to Use Advanced Functions

C-SENSE (some models)

Press C-SENSE button

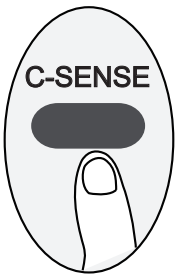

When the C-SENSE function is activated, the remote display is actual temperature at its location. The remote control will send this signal to the air conditioner every 3 minutes interval until press the C-SENSE button again.

ENERGY SAVER function (some models)

Press Energy saver button to initiate this function.
This function is available on COOL, DRY, AUTO (only AUTO-COOLING and AUTO-FAN) modes.

°C/°F (some models)

Press this button will alternate the temperature display between the °C & °F.

LED DISPLAY

Press LED button

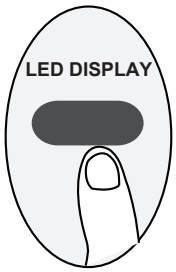

Press this button to turn on and turn off the display on the indoor unit.

SLEEP function

The SLEEP function is used to decrease energy use while you sleep (and don t need the same temperature settings to stay comfortable). This function can only be activated via remote control.
The sleep function is not available in Fan or Dry mode.Please refer to the OWNER'S MANUAL for more details.

CLEANING & MAINTENANCE

How to clean & change your filter.

Check the air filter at least once a month to see if cleaning is necessary.

Air Filter Cleaning

The air filter should be checked at least once a month to see if cleaning is necessary. Trapped particles in the filter can build up and cause an accumulation of frost on the cooling coils.

- Take the filter by the center and pull up and out.
- Wash the filter using liquid dishwashing detergent and warm water. Rinse filter thoroughly. Gently shake excess water from the filter. Be sure the filter is thoroughly dry before replacing. Or, instead of washing you may vacuum the filter clean.

Note: Never use hot water over 40°C(104°F) to clean the air filter. Never attempt to operate the unit without the air filter.

Energy Saving Note

In order to reach the maximum energy saving and comfort, it is recommended to use a cover to insulate the unit when the unit is not in use. The recommended size for the unit is 24.4″x14.8″x2.2″(WxHxD).

Cabinet Cleaning

- Be sure to unplug the air conditioner to prevent shock or fire hazard. The cabinet and front may be dusted with an oil-free cloth or washed with a cloth dampened in a solution of warm water and mild liquid dishwashing detergent. Rinse thoroughly and wipe dry.
- Never use harsh cleaners, wax or polish on the cabinet front.
- Be sure to wring excess water from the cloth before wiping around the controls. Excess water in or around the controls may cause damage to the air conditioner.
- Plug in air conditioner.

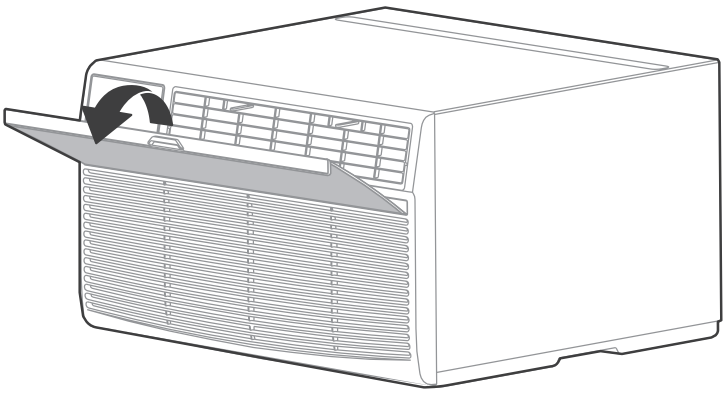

CAUTION: Clean your air conditioner occasionally to keep it looking new. **Be sure to unplug the unit before cleaning to prevent shock or fire hazards.**

CAUTION: If you plan to store the air conditioner during the winter, remove it carefully from the window according to the installation instructions. Cover it with plastic or return it to the original carton.

TROUBLESHOOTING

Problem Solving

Before calling for service, review this list. It may save your time and expense. This list includes common occurrences that are not the result of defective workman-ship or materials in this appliance.

Problem	Solution
Air conditioner does not start.	Wall plug disconnected. Push plug firmly into wall outlet.
	House fuse blown or circuit breaker tripped. Replace fuse with time delay type or reset circuit breaker.
	Plug Current Device Tripped. Press the RESET button.
	Power is OFF. Turn power ON.
Air from unit does not feel cold enough.	Room temperature below 62°F(17°C). Cooling may not occur until room temperature rises above 62°F(17°C).
	Temperature sensing behind air filter element touching cold coil. Keep it from the cold coil.
	Set to a Lower temperature.
	Compressor stopped when changing modes. Wait for 3 minutes after set to the COOL mode.
Air conditioner cooling, but room is too warm- ice forming on cooling coil behind decorative front.	Outdoor temperature below 64°F(18°C). To defrost the coil, set FAN ONLY mode.
	Air filter may be dirty. Clean filter. Refer to Care and Cleaning section. To defrost, set to FAN ONLY mode.
	Thermostat set too cold for night-time cooling. To defrost the coil, set to FAN ONLY mode. Then, set temperature to a Higher setting.
Air conditioner turns on and off rapidly	Dirty air filter- air restricted. Clean air filter.
	Outside temperature extremely hot. Set FAN speed to a Higher setting to bring air past cooling coils more frequently.

Problem	Solution
Air conditioner cooling, but room is too warm- NO ice forming on cooling coil behind decorative front.	Dirty air filter- air restricted. Clean air filter. Refer to Care and Cleaning section.
	Temperature is set too High, set temperature to a Lower setting.
	Air directional louvers positioned improperly. Position louvers for better air distribution.
	Front of units is blocked by drapes, blinds, furniture, etc. - restricts air distribution. Clear blockage in front of unit.
	Doors, windows, registers, etc. Open- cold air escapes. Close doors, windows, registers.
	Unit recently turned on in hot room. Allow additional time to remove Stored heat from walls, ceiling, floor and furniture.
Noise when unit is cooling	Air movement sound. This is normal . If too loud, set to a slower FAN setting.
	Window vibration - poor installation. Refer to installation instructions or check with installer.
Water dripping OUTSIDE when unit is cooling.	Improper installation. Tilt air conditioner slightly to the outside to allow water drainage. Refer to installation instructions - check with installer.
Water dripping OUTSIDE when unit is cooling.	Unit removing large quantity of moisture from humid room. This is normal during excessively humid days.
Remote Sensing Deactivating Prematurely (Only remote models)	Remote control not located within range. Place remote control within 20 feet and pointed in the general direction of the air conditioner unit.
	Remote control signal obstructed. Remove obstruction.
Room too cold	Set temperature too low. Increase set temperatur.

The design and specifications are subject to change without prior notice for product improvement. Consult with the sales agency or manufacturer for details. Any updates to the manual will be uploaded to the service website, please check for the latest version.

Supplier's Declaration of Conformity
47 CFR § 2.1077 Compliance Information

Unique Identifier: Midea brand，RG51G(1)/CEFU1, RG51G(1)/EFU1

Responsible Party U.S. Contact Information

Midea America Corporation
300 Kimball Dr
Parsippany NJ
07054

Telephone number or internet contact information: Midea.com/us

FCC Compliance Statement (products subject to Part 15)

This device complies with Part 15 of the FCC Rules. Operation is subject to the following two conditions: (1) This device may not cause harmful interference, and (2) this device must accept any interference received, including interference that may cause undesired operation.

Warranty

Air Conditioner Limited Warranty

Your product is protected by this Limited Warranty:

Warranty service must be obtained from Midea Consumer Services or an authorized Midea servicer.

Warranty

- Two Year full warranty from the date of delivery or the purchase date, whichever is later.
- The date of delivery establishes the warranty period, should service be required.

Midea, through its authorized servicers will:

- Pay all costs for reparing or replacing parts of this appliance which prove to be defective in materials or workmanship.

Consumer will be responsible for:

- Diagnostics, removal, transportation and reinstallation cost required because of service.
- Costs of service calls that are a result of items listed under NORMAL RESPONSABILITIES OF THE CONSUMER**

Midea replacement parts shall be used and will be warranted only for the original warranty.

NORMAL RESPONSABILITIES OF THE CONSUMER**

This warranty applies only to products in ordinary household use, and the consumer is responsible for the items listed below:

1. Proper use of the appliance in acordance with instructions provided with the product.
2. Routine maintenance and cleaning necessary to keep the good working condition.
3. Proper installation by an authorized service professional in accordance with instructions provided with the appliance and in accordance with all local plumbing, electrical and/or gas codes.
4. Proper connection to a grouded power supply of sufficient voltage, replacement of blown fuses, repair of loosen connections or defects in house wiring.
5. Expenses for making the appliance accessible for servicing.
6. Damages to finish after intallation.

EXCLUSIONS

This warranty does not cover the following:

1) Failure caused by damage to the unit while in your possesion (other than damage caused by defect or malfunction), by its improper installation, or by unreasonable use of the unit, including without limitation, failure to provide reasonable and necessary maintenance or to follow the written installation and Operating Instructions.
2) Damages caused by services performed by persons other than authorized Midea costumer service; or external causes such as abuse, misuse, inadequate power supply or acts of God.
3) If the unit is put to commercial, business, rental, or other use or application other than for consumer use, we make no warranties, express or implied, including but not limited to, any implied warranty of merchantability or fitness for use or purpose.
4) Products without original serial numbers or products that have serial numbers which have been altered or cannot be readily determined.

NOTE: Some states do not allow the exclusions or limitation of incidental or consequential damages. So this limitation or exclusion may not apply to you.

IF YOU NEED SERVICE

Keep your bill of sale, delivery slip, or some other appropriate payment Record.

The date on the bill establishes the warranty period, should service be required.

If service is performed, its your best interest to obtain and keep all receipts.

This written warranty gives you specific legal rights. You may also have other rights that vary from state to state.

Service under this warranty must be obtained by following these steps, in order:

1) Contact Midea Consumer Services or an authorized Midea services at 1 866 646 4332.
2) If there is a question as to where to obtain service, contact our consumer relations Departament.

Midea

make yourself at home

www.midea.com

© Midea 2024 all rights reserved

CW021IU-B(TTW)N8X(XD)NY(NEW)A

16120300A37273